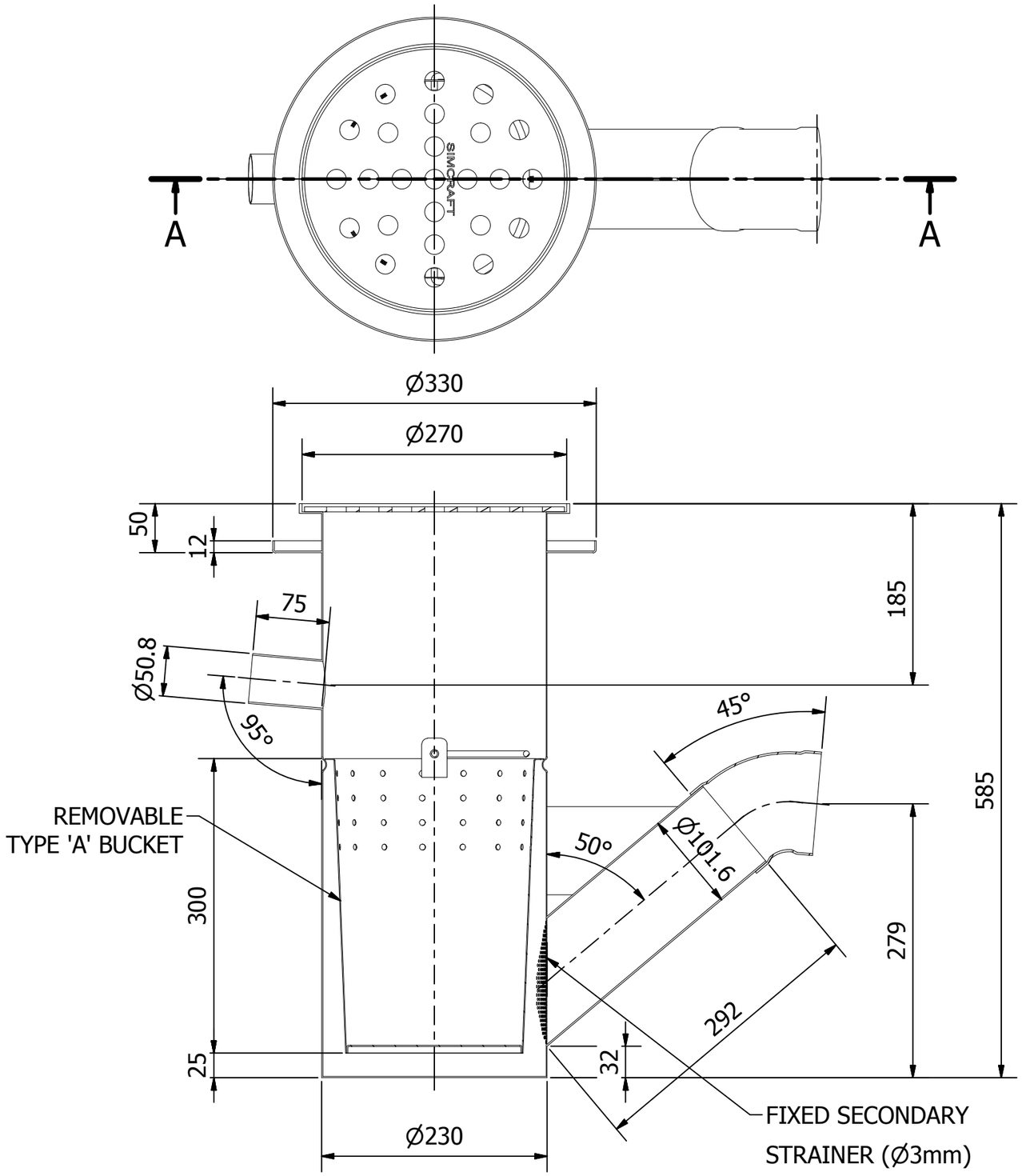

SECTION A-A
(1 : 5)

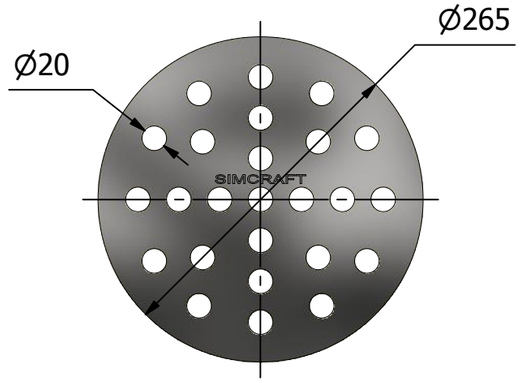

5mm SS GRATE
(1 : 5)

ISOMETRIC VIEW
(1 : 5)

© SIMCRAFT PRODUCTS
THIS DRAWING IS THE PROPERTY OF SIMCRAFT PRODUCTS AND MUST NOT BE COPIED IN WHOLE OR IN PART FOR ANY REASON WHATSOEVER WITHOUT PERMISSION IN WRITING.

REV	DESCRIPTION	DATE	APPROVED
B	TYPE 'A' BUCKET UPDATED	13-0-2019	
A	ISSUED FOR APPROVAL	14-03-2019	

Designed by	Date	Checked by	Date	Project	Scale
MS	14-03-2019			CATALOGUE ITEMS ITEM CODE: 230007	1:5

SIMCRAFT. PRODUCTS

Title	Drawing No.	Revision	Sheet	
SIM-PTG100 PLASTER TRAP	SIM-PTG100	B	1 / 1	A3