Eco Guardians Pty Ltd - info@ecoguardians.com.au

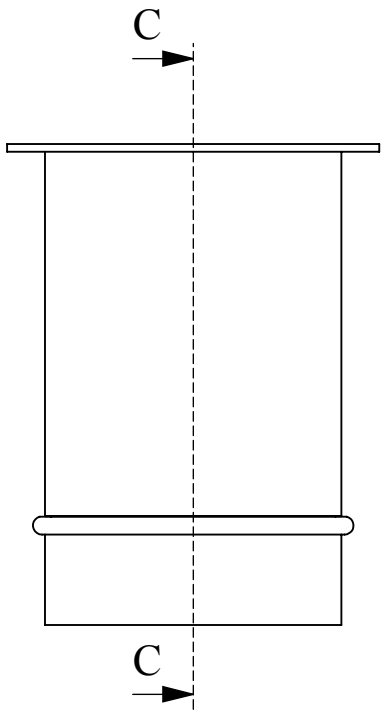

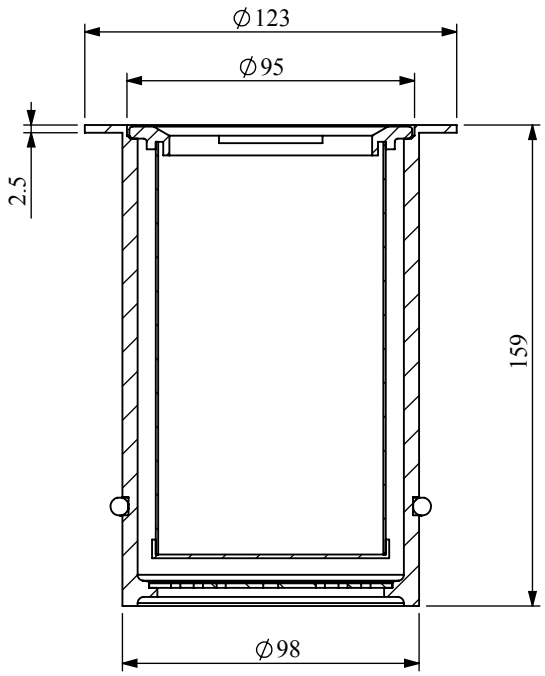

SECTION C-C
SCALE 1 : 2.5

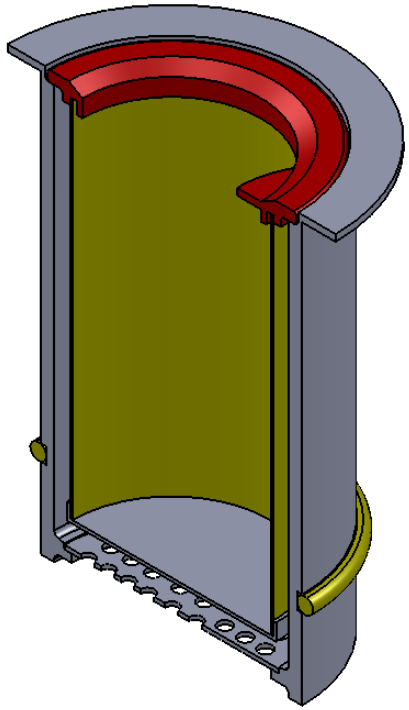

Unless stated, using general tolerance DIN ISO 2768-m below

Length & Diameter (mm)					
0.5-6	6-30	30-120	120-315	315-1000	1000-2000
±0.1	±0.2	±0.3	±0.5	±0.8	±1.2

Radius & Chamfer (mm)			Angle (degrees & mins)				
0.5-3	>3-6	>6-30	<10	>10-50	>50-120	>120-400	>400
±0.2	±0.5	±1	±1°	±0°30'	±0°20'	±0°30'	±0°5'

Comp. No.	Part Name	Qty.	Material	Size	Remark
-	DrainProtector - Troughs	-	-	-	-

Product Name : DrainProtector - Troughs

Operation

Scale -

Drawing No. : FT660

Paper Size A4

Revise*	History Change	Prepared by	Checked by	Approved by	Date
00	First Issue	ar			20.05.10