DocuSign Envelope ID: D02654E8-1738-4B59-B551-4B2FDB7E3BF1

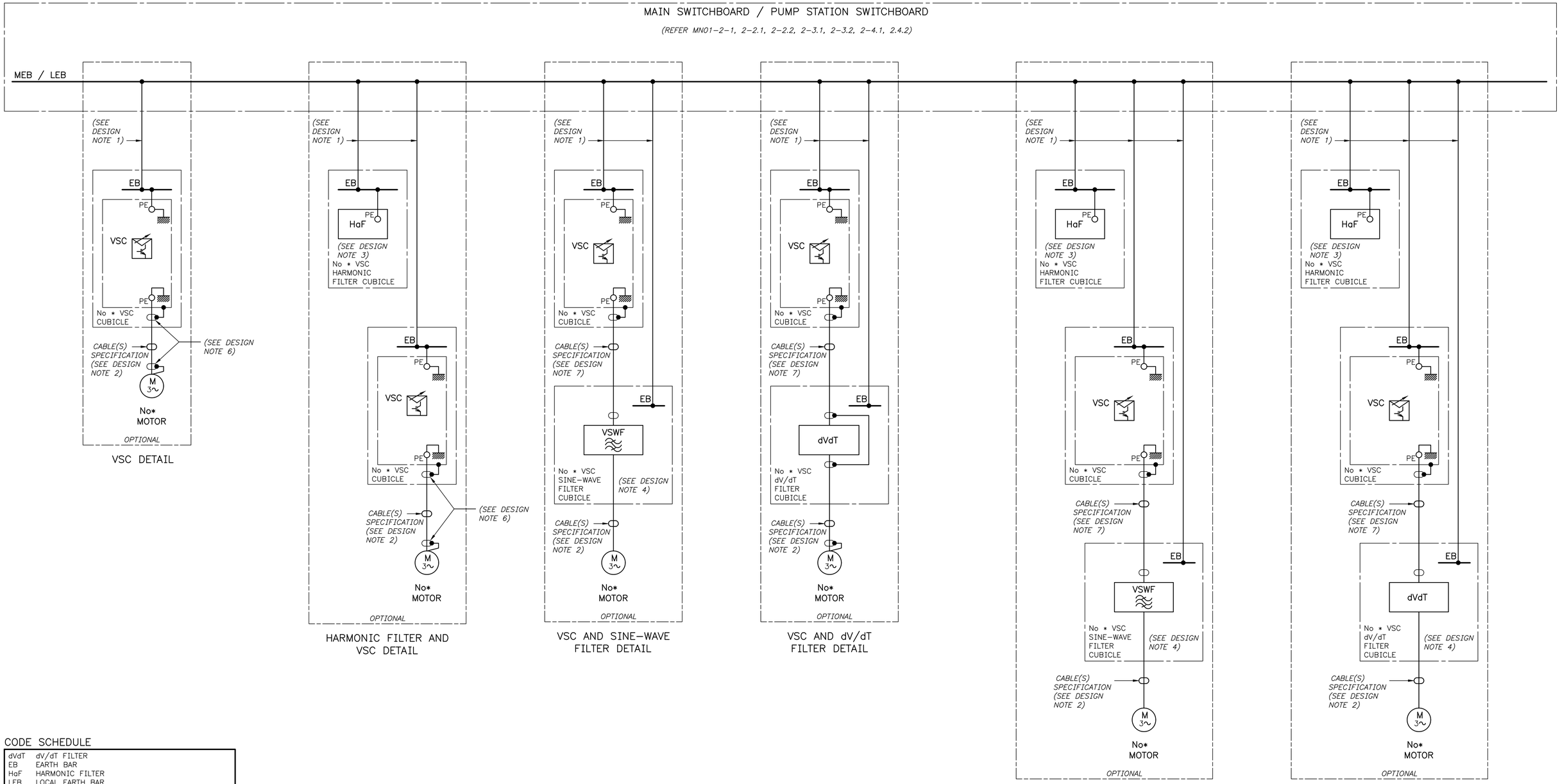

CODE SCHEDULE

dVdT	dV/dT FILTER
EB	EARTH BAR
HaF	HARMONIC FILTER
LEB	LOCAL EARTH BAR
MEB	MAIN EARTH BAR
VSC	VARIABLE SPEED CONTROLLER
VSWF	VARIABLE SPEED CONTROLLER SINEWAVE FILTER

DESIGN NOTES

1. VSC CUBICLE AND VSC FILTER CUBICLE TYPICALLY INCLUDED IN MAIN SWITCHBOARD, IF VSC CUBICLE AND VSC FILTER CUBICLE LOCATED REMOTE FROM MAIN SWITCHBOARD EARTH CABLE(S) TO BE DETAILED BY ELECTRICAL DESIGN ENGINEER
2. ELECTRICAL DESIGN ENGINEER SHALL DETAIL METHOD OF CONNECTION OF MOTOR CABLES. E.G. DIRECT WIRED OR DECONTACTOR OR DISCONNECT CUBICLE
3. A HARMONIC FILTER SHALL BE INSTALLED IF NECESSARY TO COMPLY WITH HARMONIC DISTORTION LIMITS SPECIFIED IN DS22, SECTION 7
4. SINE-WAVE FILTERS ARE REQUIRED FOR SUBMERSIBLE BOREHOLE PUMP MOTORS
5. LINE REACTORS DO NOT FORM PART OF THIS DESIGN
6. CABLE SCREENS SHALL BE TERMINATED AND EARTHED CONCENTRICALLY AT BOTH ENDS
7. SCREENED CABLE BETWEEN VSC AND SINE WAVE FILTER (OR dV/dT FILTER) IS RECOMMENDED TO AVOID RADIO FREQUENCY INTERFERENCE (RFI) WITH COMMUNICATIONS SYSTEM

VSC DESIGN CRITERIA

1. MAXIMUM OUTPUT CURRENT OF VSC IN AN OUTDOOR MK 8 VSC VENTILATED CUBICLE IS LIMITED TO MAXIMUM 125A AT MAXIMUM AMBIENT TEMPERATURE OF 50ºC
2. MAXIMUM OUTPUT CURRENT OF VSC IN AN OUTDOOR MK 8 VSC VENTILATED CUBICLE IS LIMITED TO MAXIMUM 150.5A AT MAXIMUM AMBIENT TEMPERATURE 45ºC
3. MAXIMUM OUTPUT CURRENT OF VSC IN THE RANGE 150.6 TO 263A REQUIRES A TEMPERATURE CONTROLLED ENVIRONMENT. (PLANNED FUTURE DESIGN)

ISSUE	DATE	GRID	REVISION	DRN	REC	APPD

DESIGN SURVEY NONE | VERTICAL DATUM NONE | COORDINATE SYS NONE | ASCON SURVEY NONE | DES REF

DES CALC S GILMOUR | DES CHD T LIU | DRN SA MEMORY | Q.C. CHD P HARVEY

NORTH POINT

ENGINEERING

SUBMITTED 16/06/2023 SA MEMORY (SIGNED) SENIOR TECHNICAL ADVISOR – ELECT

RECOMMENDED 16/06/2023 S GILMOUR (SIGNED) SENIOR ENGINEER – ELECTRICAL

APPROVED 6/06/2023 T LIU (SIGNED) PRINCIPAL ENGINEER – ELECTRICAL

WATER CORPORATION

ELECTRICAL STANDARD SWITCHBOARD DESIGNS
SMALL PUMP STATIONS
PRIMARY DESIGN – EARTHING DIAGRAM TEMPLATE
VARIABLE SPEED CONTROLLER OPTIONS

FILE | PROJECT | PLAN MN01-2-5 | CAD | ISSUE A | ORIGINAL SHEET SIZE A1 | MF

© THIS DRAWING IS THE PROPERTY OF THE WATER CORPORATION. IT SHALL NOT BE COPIED WITHOUT PERMISSION.

STANDARDS\APPROVED\MN01\MN01-002-005-01A 10:41 16/06/2023 MEMORYSO/NB46194

566 810