DocuSign Envelope ID: 1FDA3626-97B5-486F-AC59-BE2DC00589B9

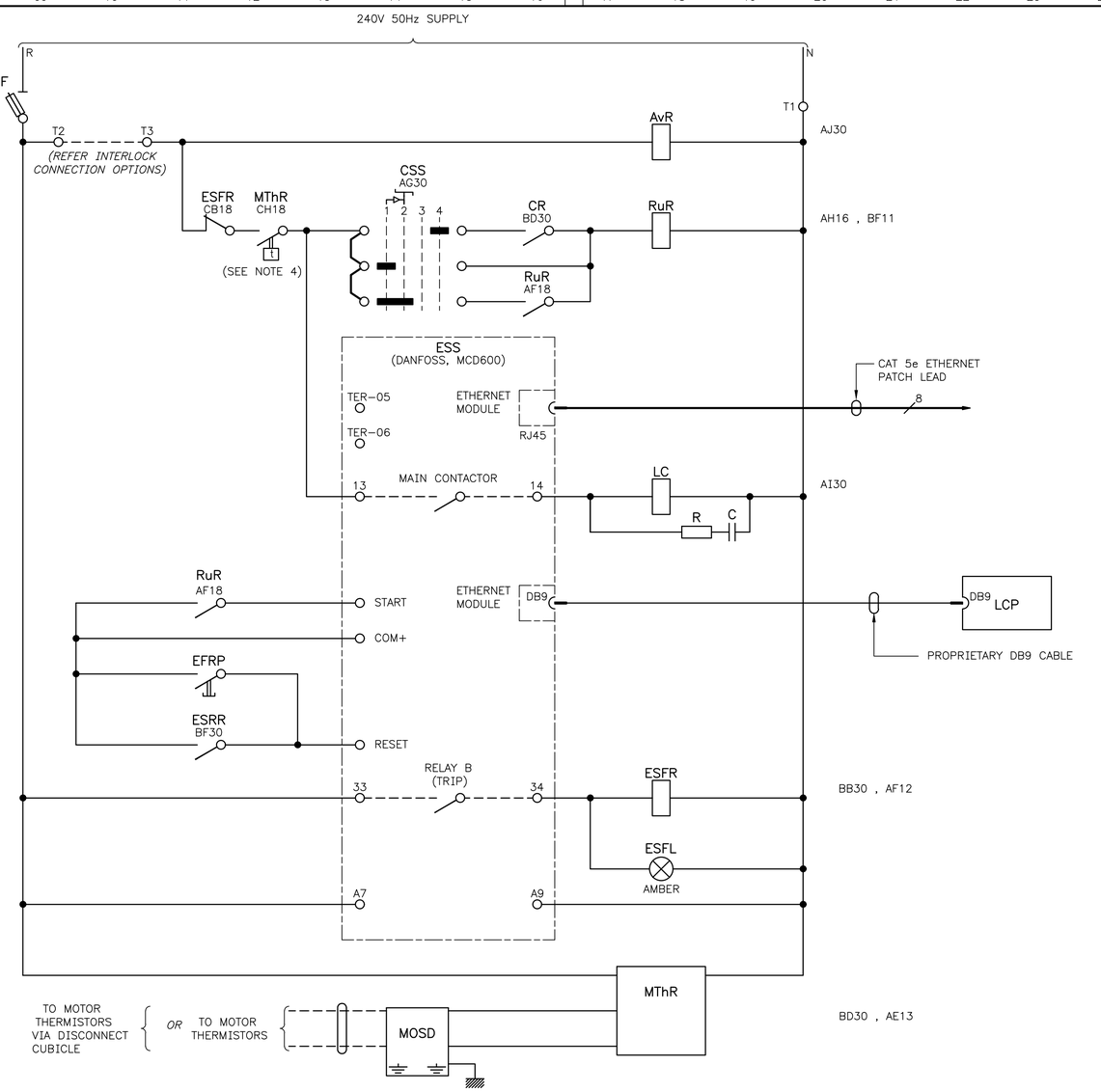

ESS PARAMETERS

PARAMETER	DESCRIPTION	SETTING	COMMENTS
1–2	MOTOR FULL LOAD CURRENT	**A	
1–3	MOTOR kW	**kW	
1–4	LOCKED ROTOR TIME	**:** MIN:SEC	
1–5	LOCKED ROTOR CURRENT	***%	
1–6	MOTOR SERVICE FACTOR	***%	
2–1	START MODE	**	
2–2	START RAMP TIME	**:** MIN:SEC	TO MAXIMUM 15s
2–3	INITIAL CURRENT	***%	
2–4	CURRENT LIMIT	***%	TO MAXIMUM 350%
2–5	ADAPTIVE START PROFILE	**	
2–9	STOP MODE	**	
2–10	STOP TIME	**:** MIN:SEC	TO MAXIMUM 15s
2–11	ADAPTIVE STOP PROFILE	**	
2–12	ADAPTIVE CONTROL GAIN	**%	
5–16	RESTART DELAY	00:01 MIN:SEC	
5–17	STARTS PER HOUR	**	TO MAXIMUM 5
6–3	CURRENT IMBALANCE	LOG ONLY	
6–4	UNDERCURRENT	LOG ONLY	
6–5	OVERCURRENT	LOG ONLY	
6–6	UNDERVOLTAGE	LOG ONLY	
6–7	OVERVOLTAGE	LOG ONLY	
6–10	EXCESS START TIME	TRIP STARTER	
6–11	INPUT A	LOG ONLY	
6–12	INPUT B	LOG ONLY	
6–13	NETWORK COMMS	LOG ONLY	
6–14	REMOTE KEYPAD	LOG ONLY	
6–15	FREQUENCY	TRIP STARTER	
6–16	PHASE SEQUENCE	LOG ONLY	
6–17	MOTOR OVER TEMPERATURE	TRIP STARTER	
6–18	MOTOR THERMISTOR	LOG ONLY	
6–19	SHORTED SCR	TRIP STARTER	
6–20	BATTERY/CLOCK	LOG ONLY	
7–9	RESET/ENABLE LOGIC	NORMALLY OPEN	
8–1	RELAY A FUNCTION	OFF	
8–4	RELAY B FUNCTION	TRIP STARTER	

INSTRUCTIONS FOR USE

1. *ASTERISKS INDICATE APPLICATION SPECIFIC VALUES THAT SHALL BE NOMINATED BY DETAIL DESIGNER*
2. *PARAMETERS NOT LISTED REMAIN AT DEFAULT VALUES*
3. *STANDARD REGISTERS FOR PUMP MONITORING:*
   - *CURRENT 40005*
   - *AVERAGE 3 PHASE POWER 40608*
4. *FOR ESS PARAMETERS TO FUNCTION ETHERNET CARD NEEDS TO BE SET TO LEGACY MODE BY RESETTING REGISTER 40001 TO 0*
5. *PARAMETER GROUP 12 COMMUNICATIONS CARD SETTINGS TO BE DEFINED BY OPERATIONS TECHNOLOGY*

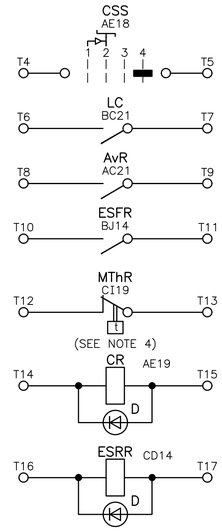

CONTROL INTERCONNECTIONS

CODE SCHEDULE

AvR	AVAILABLE RELAY
C	CAPACITOR
CF	CONTROL FUSE
CR	CONTROL RELAY
CSS	CONTROL SELECTOR SWITCH
D	DIODE
EFRP	ELECTRONIC SOFT STARTER FAULT RESET PUSHBUTTON
ESFL	ELECTRONIC SOFT STARTER FAULT INDICATING LIGHT
ESFR	ELECTRONIC SOFT STARTER FAULT RELAY
ESpP	EMERGENCY STOP PUSHBUTTON
ESRR	ELECTRONIC SOFT STARTER REMOTE RESET RELAY
ESS	ELECTRONIC SOFT STARTER
LC	LINE CONTACTOR
LCP	LOCAL CONTROL PANEL
MOSD	MOTOR OVERTEMPERATURE SURGE DIVERTER
MThR	MOTOR THERMISTOR RELAY
R	RESISTOR
RuR	RUN RELAY

GENERAL NOTES

1. DRAWN NO POWER CONDITION
2. UNLESS OTHERWISE SHOWN 240V AC CONTROL CABLING MINIMUM 0.75mm^2 Cu PVC V75 OR LSFLEX R–125
3. UNLESS OTHERWISE SHOWN 24V DC CONTROL CABLING MINIMUM 0.5mm^2 Cu PVC V75 OR LSFLEX R–125
4. MOTOR THERMISTOR RELAY CONTACTS CHANGE STATE ON ENERGIZATION

CONTROL SELECTOR SWITCH

POSITION	FUNCTION
1	LOCAL START
2	LOCAL RUN
3	OFF
4	NORMAL

REFERENCE EXPLANATION

(P)WXYZ
41#1.1#AB34

- PANEL LETTER
- CODE
- HORIZONTAL LOCATION
- VERTICAL LOCATION
- PART Nº (IF REQUIRED)
- SHEET Nº
- BUNDLE Nº

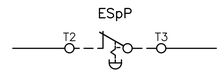

INTERLOCK CONNECTION OPTIONS

SELECTION DEPENDENT ON APPLICATION

ISSUE	DATE	GRID	REVISION	DRN	REC	APPD
D	01/2022		COMMUNICATION CHANGED TO ETHERNET; PTMR DELETED	PH	TK	EG
C	03/2021		REVISED FOR MCD600; CONTROL INTERLOCKS REVISED	PH	TL	EG
B	10/2020		SDTAM MODULE ADDED; MOTOR PROTECTION CIRCUIT AND AvR CONTROL WIRING REVISED	PH	EG	NJ

DESIGN SURVEY NONE | VERTICAL DATUM NONE | DES CALC T LIU | NORTH POINT
COORDINATE SYS NONE | DES CHD E GLIWSKI
ASCON SURVEY NONE | DES REF | DRN P HARVEY | Q.C. CHD S MEMORY

SUBMITTED 29/11/2019 T LIU (SIGNED) SENIOR ENGINEER – ELECTRICAL
RECOMMENDED 29/11/2019 E GLIWSKI (SIGNED) PRINCIPAL ENGINEER – ELECTRICAL
APPROVED 28/11/2019 N JOHNSON (SIGNED) SNR PRINCIPAL ENGINEER – ELECT

ENGINEERING

WATER CORPORATION

ELECTRICAL STANDARD SWITCHBOARD DESIGNS
SMALL PUMP STATIONS
MOTOR STARTER REFERENCE – WATER
ELECTRONIC SOFT STARTER – CONTROL DIAGRAM 100.1A – 263A

FILE | PLAN | CAD | ISSUE
PROJECT | MN01–23–8.2 | D

ORIGINAL SHEET SIZE A1

MF

566
810

© THIS DRAWING IS THE PROPERTY OF THE WATER CORPORATION. IT SHALL NOT BE COPIED WITHOUT PERMISSION.

STANDARDS\APPROVED\MN01\MN01–023–008–02D 14:39 25/03/2022 HARVEYPO/NB46193