DocuSign Envelope ID: ACD6EF36-0C12-492E-847D-213A14613C85

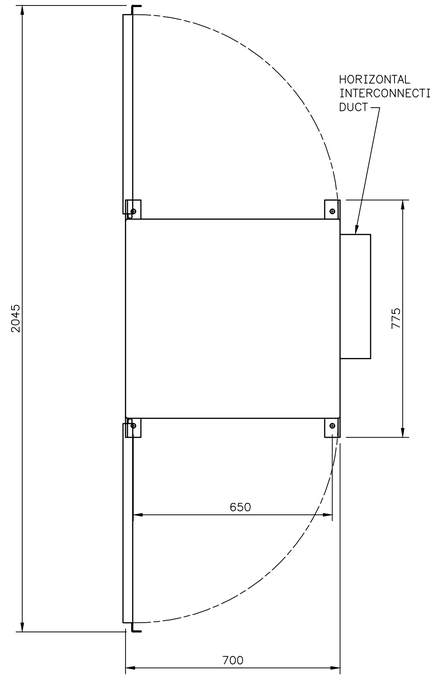


TOP VIEW

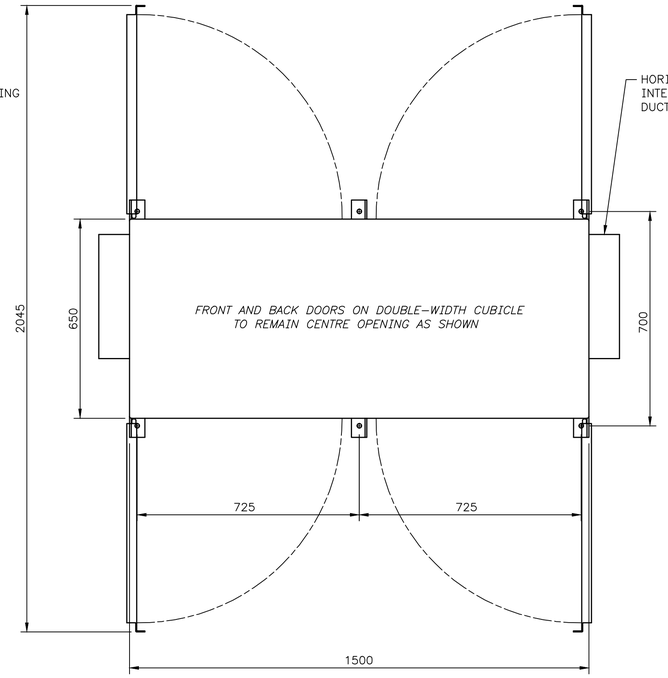


TOP VIEW

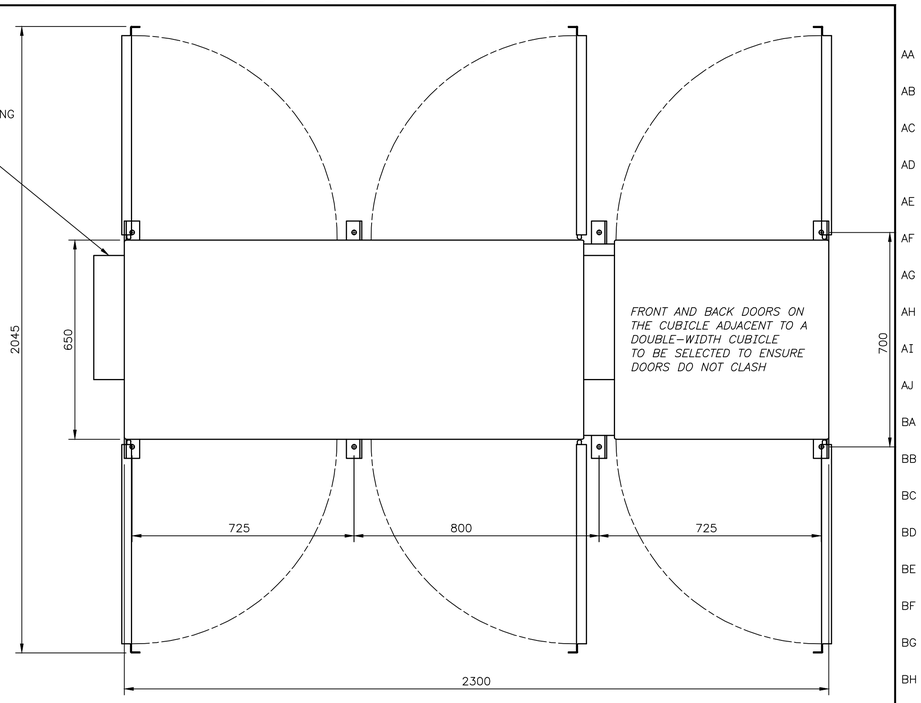


TOP VIEW

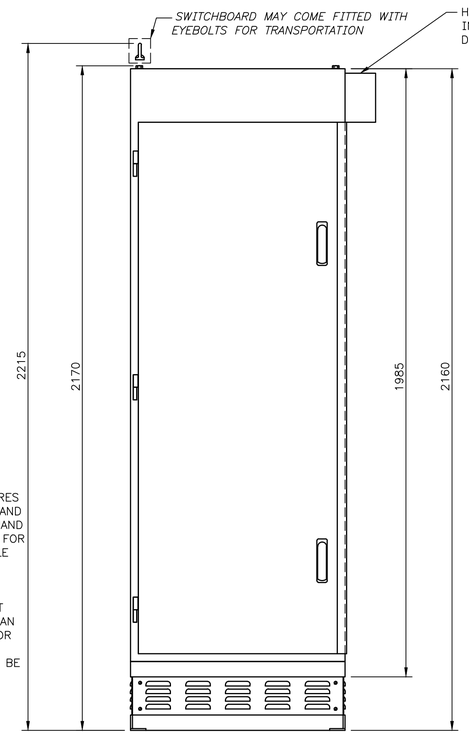


FRONT VIEW

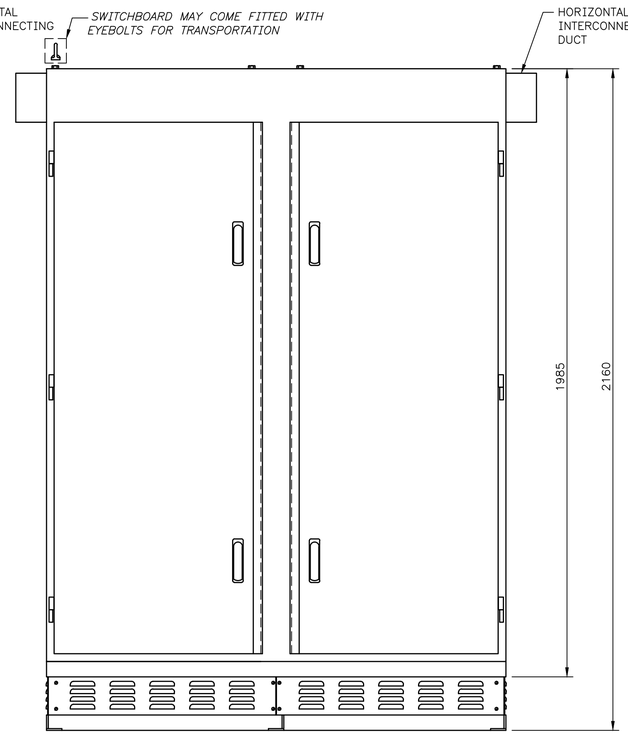


FRONT VIEW

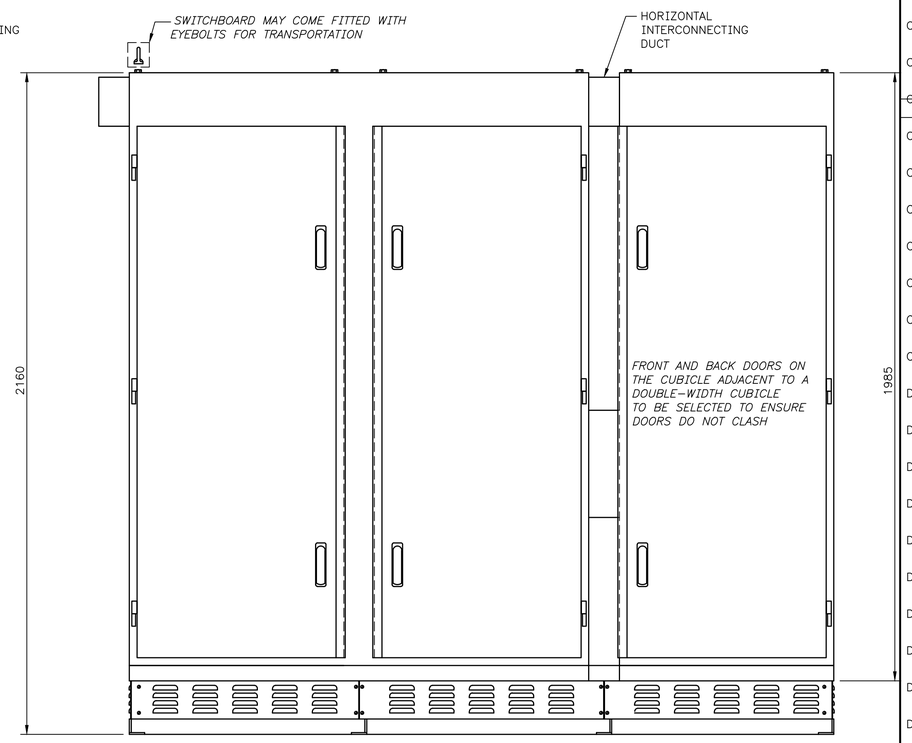


FRONT VIEW

## GENERAL NOTES

1. UNLESS OTHERWISE SHOWN ALL DIMENSIONS ARE IN MILLIMETRES
2. THE STANDARD FRONT DOOR ARRANGEMENT SHALL BE RIGHT HAND OPENING AND THE BACK DOOR ARRANGEMENT SHALL BE LEFT HAND OPENING FOR ALL SWITCHBOARDS, WITH THE EXCEPTION THAT, FOR MULTIPLE CUBICLE SWITCHBOARDS, THE DOORS OF THE CUBICLE ADJACENT TO THE MK9W DOUBLE-WIDTH CUBICLE TO BE SELECTED TO ENSURE ADJACENT DOORS DO NOT CLASH. (REFER EXAMPLE THREE CUBICLE SWITCHBOARD ARRANGEMENT)
3. WHERE AN ALTERNATE FRONT AND/OR BACK DOOR ARRANGEMENT IS CONSIDERED NECESSARY TO SUIT PROJECT REQUIREMENTS. AN APPROVAL FOR DISPENSATION SHALL BE SORT FROM THE SENIOR PRINCIPAL ENGINEER, ELECTRICAL STANDARDS, ENGINEERING.
4. FRONT OF SWITCHBOARD AND DOOR OPENING ARRANGEMENT TO BE CLEARLY DEFINED ON SITE LAYOUT DRAWING

100 50 0 100 200 300 400 500 600 700 mm

1:10 AT SHEET SIZE A1

MK9 SINGLE CUBICLE
WITH 225 HIGH BASE

MK9W DOUBLE-WIDTH CUBICLE
WITH 225 HIGH BASE

MK9W DOUBLE-WIDTH CUBICLE + SINGLE CUBICLE
WITH 225 HIGH BASE

| ISSUE | DATE | GRID | REVISION | DRN | REC | APPD |
|---|---|---|---|---|---|---|
| C | 03/2021 | | SWITCHBOARD DOORS REARRANGED. THREE CUBICLE ARRANGEMENT ADDED. NOTE 2 REVISED, NOTE 3 RENUMBERED. NEW NOTE 3 ADDED. 4TH LINE TITLE REVISED | PH | TK | EG EG |
| B | 10/2020 | | DOOR DETAILS AND EYE BOLTS REVISED | PH | EG | NJ |

DESIGN SURVEY NONE | VERTICAL DATUM NONE | COORDINATE SYS NONE | ASCON SURVEY NONE | DES REF | DES CALC T LIU | DES CHD E GLIWSKI | DRN P HARVEY | Q.C. CHD S MEMORY

NORTH POINT

ENGINEERING

SUBMITTED 29/11/2019 T LIU (SIGNED) SENIOR ENGINEER – ELECTRICAL

RECOMMENDED 29/11/2019 E GLIWSKI (SIGNED) PRINCIPAL ENGINEER – ELECTRICAL

APPROVED 28/11/2019 N JOHNSON (SIGNED) SNR PRINCIPAL ENGINEER – ELECT

WATER CORPORATION

ELECTRICAL STANDARD SWITCHBOARD DESIGNS
SMALL PUMP STATIONS
SWITCHBOARD REFERENCE
MK9 OUTDOOR SWITCHBOARD–CUBICLE DIMENSIONS & DOOR DETAILS

FILE | PLAN MN01–21–2.1 | CAD | ISSUE C | ORIGINAL SHEET SIZE A1

PROJECT | MF

566
810

© THIS DRAWING IS THE PROPERTY OF THE WATER CORPORATION. IT SHALL NOT BE COPIED WITHOUT PERMISSION.

STANDARDS\APPROVED\MN01\MN01–021–002–01C 11:19 05/03/2021 HARVEYPO/WS27105