DocuSign Envelope ID: 6AE2AA12-CF60-4633-A59A-45EC94526896

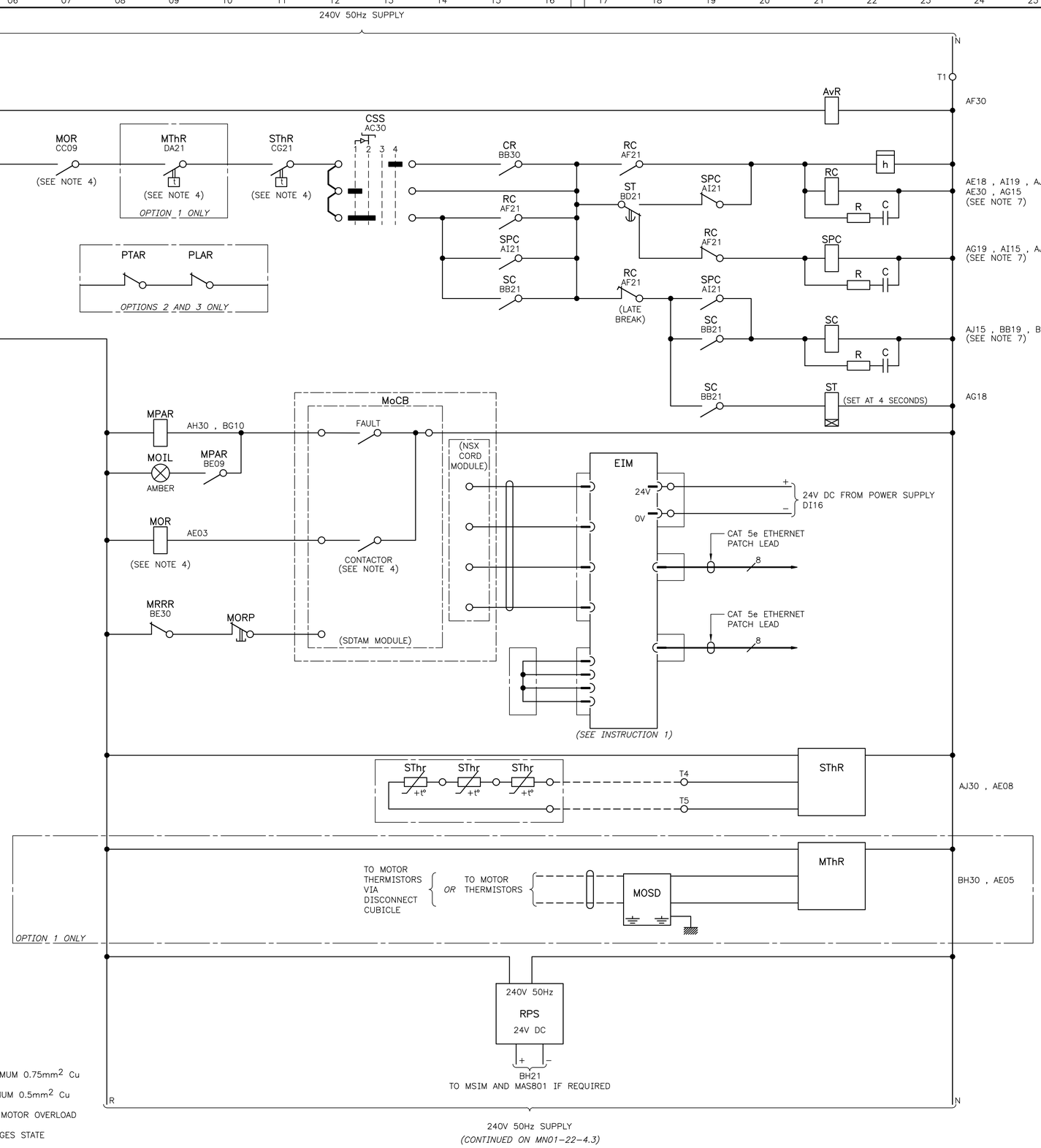

OPTION TABLE

No	DESCRIPTION
1	MOTOR WITH THERMISTORS
2	MOTOR WITH THERMAL SWITCH AND STATOR LEAK SENSOR (FLYGT)
3	MOTOR WITH THERMAL SWITCH AND STATOR LEAK SENSOR (FLYGT MAS801)

CONTROL SELECTOR SWITCH

POSITION	FUNCTION
1	LOCAL START
2	LOCAL RUN
3	OFF
4	NORMAL

REFERENCE EXPLANATION

(P)WXYZ
41#1.1#AB34

- PANEL LETTER
- CODE
- HORIZONTAL LOCATION
- VERTICAL LOCATION
- PART Nº (IF REQUIRED)
- SHEET Nº
- BUNDLE Nº

CODE SCHEDULE

AvR	AVAILABLE RELAY
C	CAPACITOR
CF	CONTROL FUSE
CR	CONTROL RELAY
CSS	CONTROL SELECTOR SWITCH
D	DIODE
EIM	ETHERNET COMMUNICATION INTERFACE MODULE
ESpP	EMERGENCY STOP PUSHBUTTON
h	HOUR METER
MoCB	MOTOR CIRCUIT BREAKER
MOIL	MOTOR OVERLOAD FAULT INDICATING LIGHT
MOR	MOTOR OVERLOAD RELAY
MORP	MOTOR OVERLOAD FAULT RESET PUSHBUTTON
MOSD	MOTOR OVERTEMPERATURE SURGE DIVERTER
MPAR	MOTOR PROTECTION AUXILIARY RELAY
MRRR	MOTOR PROTECTION REMOTE RESET RELAY
MThR	MOTOR THERMISTOR RELAY
PLAR	PUMP LEAK ALARM RELAY
PTAR	PUMP MOTOR HIGH TEMPERATURE ALARM RELAY
R	RESISTOR
RC	RUN CONTACTOR
RPS	REGULATED POWER SUPPLY
SC	START CONTACTOR
SPC	STAR POINT CONTACTOR
ST	START TIMER
SThR	STARTER THERMISTOR RELAY
SThr	STARTER THERMISTOR

INSTRUCTIONS FOR USE

1. *LOCKING PAD ON EIM TO BE SET TO 'LOCKED'*
2. *STANDARD REGISTERS FOR PUMP MONITORING:*
   - *AVERAGE 3 PHASE CURRENT 1027*
   - *TOTAL ACTIVE POWER 1037*

GENERAL NOTES

1. DRAWN NO POWER CONDITION
2. UNLESS OTHERWISE SHOWN 240V AC CONTROL CABLING MINIMUM 0.75mm^2 Cu PVC V75 OR LSFLEX R-125
3. UNLESS OTHERWISE SHOWN 24V DC CONTROL CABLING MINIMUM 0.5mm^2 Cu PVC V75 OR LSFLEX R-125
4. MOTOR THERMISTOR RELAY, STARTER THERMISTOR RELAY AND MOTOR OVERLOAD RELAY CONTACTS CHANGE STATE ON ENERGIZATION
5. PUMP MONITORING RELAY 'HIGH TEMP ALARM' CONTACT CHANGES STATE ON ENERGIZATION
6. PUMP MONITORING RELAY 'LEAK ALARM' CONTACT DOES NOT CHANGE STATE ON ENERGIZATION
7. FOR CONTACTOR MAIN POLES REFER MN01-22-3.2

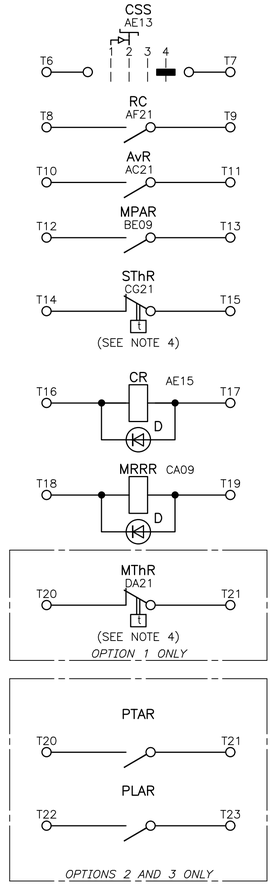

CONTROL INTERCONNECTIONS

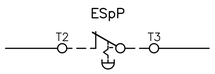

INTERLOCK CONNECTION OPTIONS

SELECTION DEPENDENT ON APPLICATION

ISSUE	DATE	GRID	REVISION	DRN	REC	APPD
F	01/2023		PTAR CONTROL CONTACT REVISED	PH	SG	EG
E	05/2021		EIM WAS MSIM; CONNECTIONS REVISED; MPAR CONTACT ADDED	PH	TL	EG
D	03/2021		AvR CONTROL WIRING AND CONTROL INTERLOCKS REVISED	PH	TL	EG
C	10/2020		AvR CONTROL WIRING AND MoCB REVISED	PH	EG	NJ
B	11/2019		CONTROL REPLACED WITH MoCB CONTROL DIAGRAM; GENERAL NOTES REVISED	PH	EG	NJ

566
810

DESIGN SURVEY NONE | VERTICAL DATUM NONE | DES CALC T LIU | NORTH POINT
COORDINATE SYS NONE | DES CHD E GLIWSKI
ASCON SURVEY NONE | DES REF | DRN P HARVEY | Q.C. CHD S MEMORY

SUBMITTED 26/02/2019 T LIU (SIGNED) SENIOR ENGINEER – ELECTRICAL
RECOMMENDED 26/02/2019 E GLIWSKI (SIGNED) PRINCIPAL ENGINEER – ELECTRICAL
APPROVED 26/02/2019 N JOHNSON (SIGNED) SNR PRINCIPAL ENGINEER – ELECT

ENGINEERING

WATER CORPORATION

ELECTRICAL STANDARD SWITCHBOARD DESIGNS
SMALL PUMP STATIONS
MOTOR STARTER REFERENCE – WASTEWATER
ATr STARTER – CONTROL DIAGRAM 100.1A – 263A

FILE | PLAN | CAD | ISSUE F | ORIGINAL SHEET SIZE A1
PROJECT | MN01-22-4.2 | MF

STANDARDS\APPROVED\MN01\MN01-022-004-02F 08:59 12/04/2023 HARVEYP0/NB46193

© THIS DRAWING IS THE PROPERTY OF THE WATER CORPORATION. IT SHALL NOT BE COPIED WITHOUT PERMISSION.