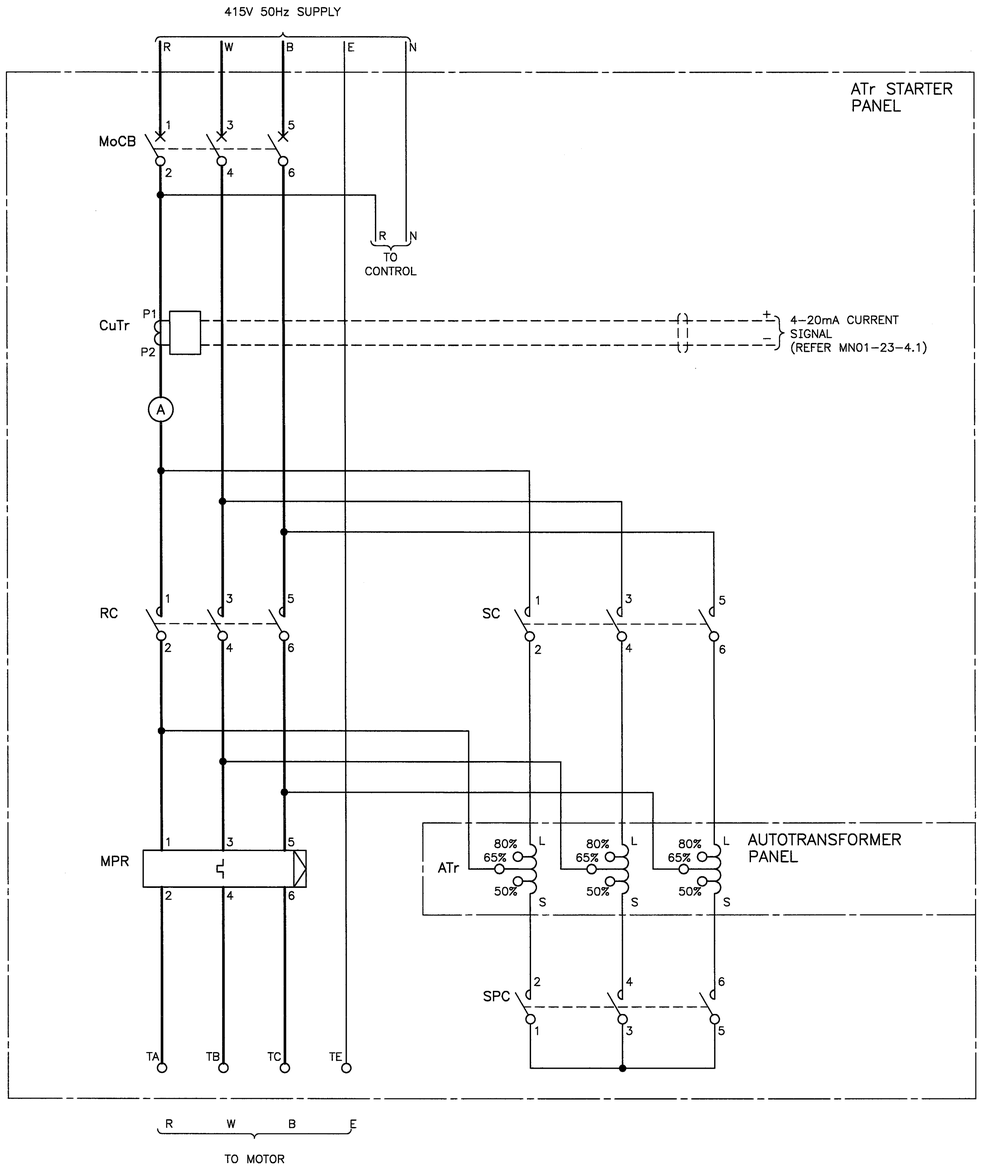

4.1A – 21A

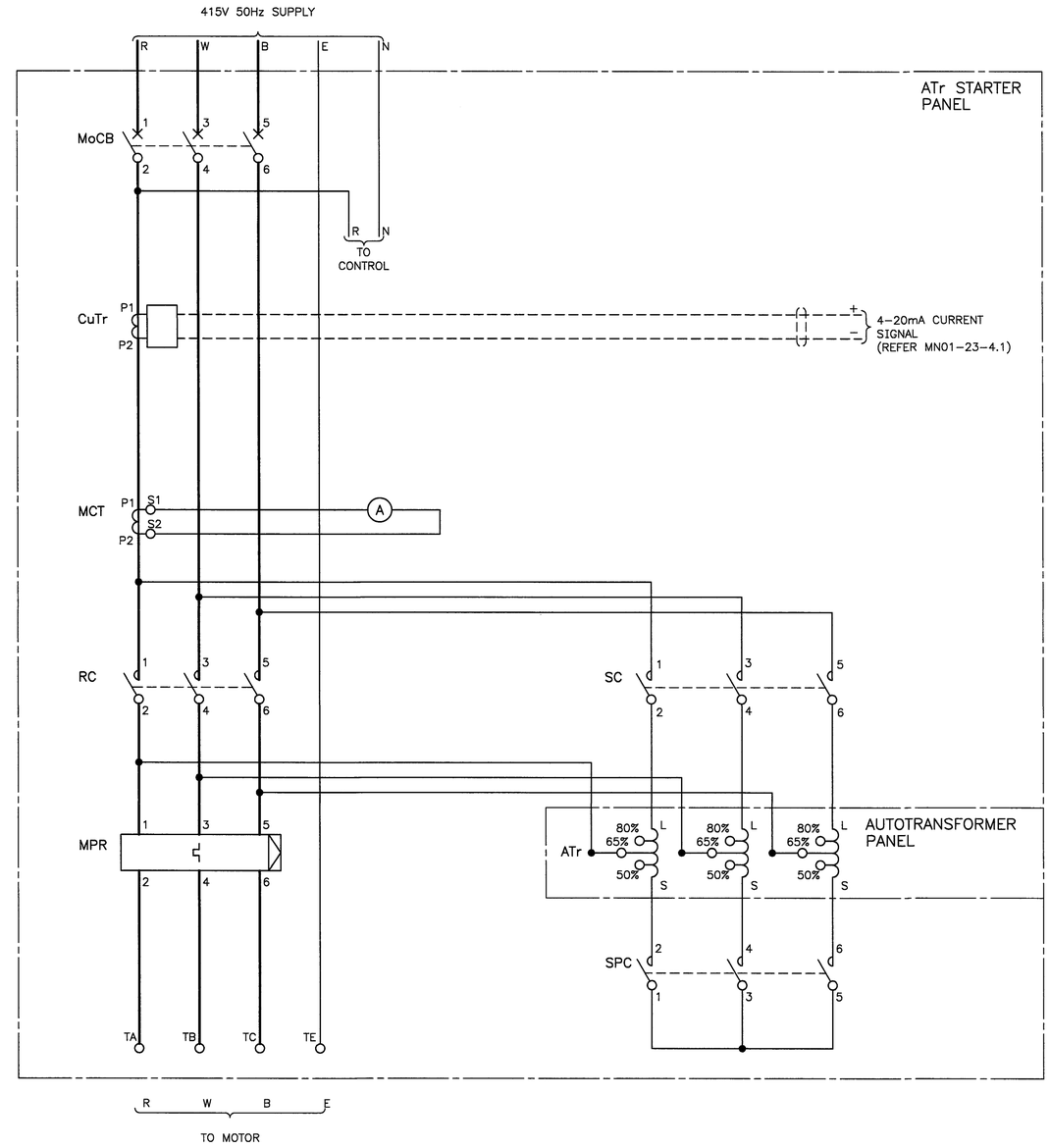

21.1A – 89A

CODE SCHEDULE

A	AMMETER
ATr	AUTOTRANSFORMER
CuTr	CURRENT TRANSFORMER AND TRANSDUCER
MCT	METERING CURRENT TRANSFORMER
MoCB	MOTOR CIRCUIT BREAKER
MPR	MOTOR PROTECTION RELAY
RC	RUN CONTACTOR
SC	START CONTACTOR
SPC	STAR POINT CONTACTOR

ISSUE	DATE	GRID	REVISION	DRN	REC	APPD
B	02/2019		DRAWING REFERENCE REVISED			

DESIGN SURVEY NONE | VERTICAL DATUM NONE | COORDINATE SYS NONE | ASCON SURVEY NONE | DES REF | DES CALC E FONG | DES CHD K O'GRADY | DRN P HARVEY | Q.C. CHD S MEMORY

NORTH POINT

SUBMITTED 24/07/2017 E FONG (SIGNED) SENIOR ENGINEER – ELECTRICAL

RECOMMENDED 24/07/2017 K O'GRADY (SIGNED) PRINCIPAL ENGINEER – ELECTRICAL

APPROVED 24/07/2017 N JOHNSON (SIGNED) SNR PRINCIPAL ENGINEER – ELECT

ENGINEERING

WATER CORPORATION

ELECTRICAL STANDARD SWITCHBOARD DESIGNS
SMALL PUMP STATIONS
MOTOR STARTER REFERENCE – WATER
ATr STARTER – POWER DIAGRAM 4.1A – 89A

FILE | PROJECT | PLAN MN01–23–3.1 | CAD | ISSUE B

ORIGINAL SHEET SIZE A1

MF 26 FEB 2019

566 810

© THIS DRAWING IS THE PROPERTY OF THE WATER CORPORATION. IT SHALL NOT BE COPIED WITHOUT PERMISSION.

STANDARDS\APPROVED\MN01\MN01–023–003–01B 09:56 25/02/2019 harveyp0/WS27105