DocuSign Envelope ID: 24381753-08F0-4DCD-B103-7A44A7082BFA

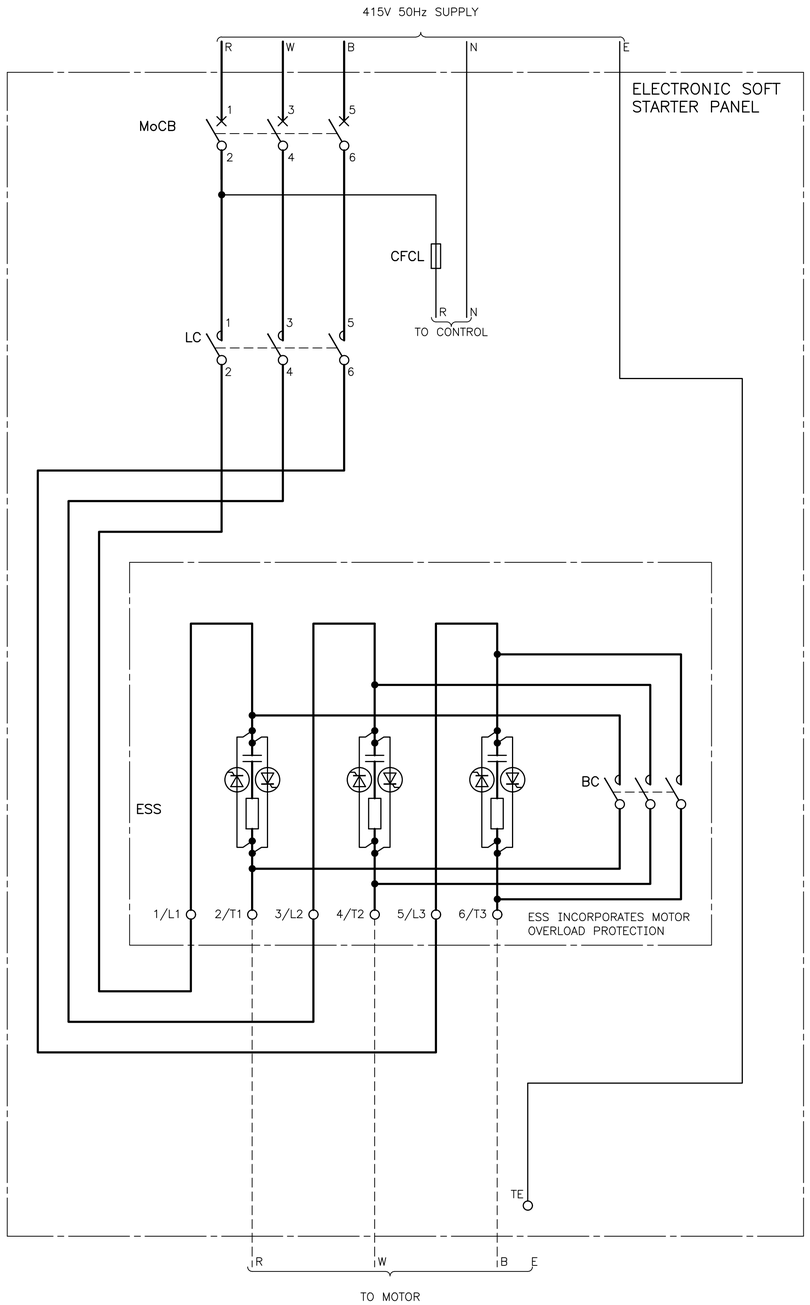

100.1A – 200A

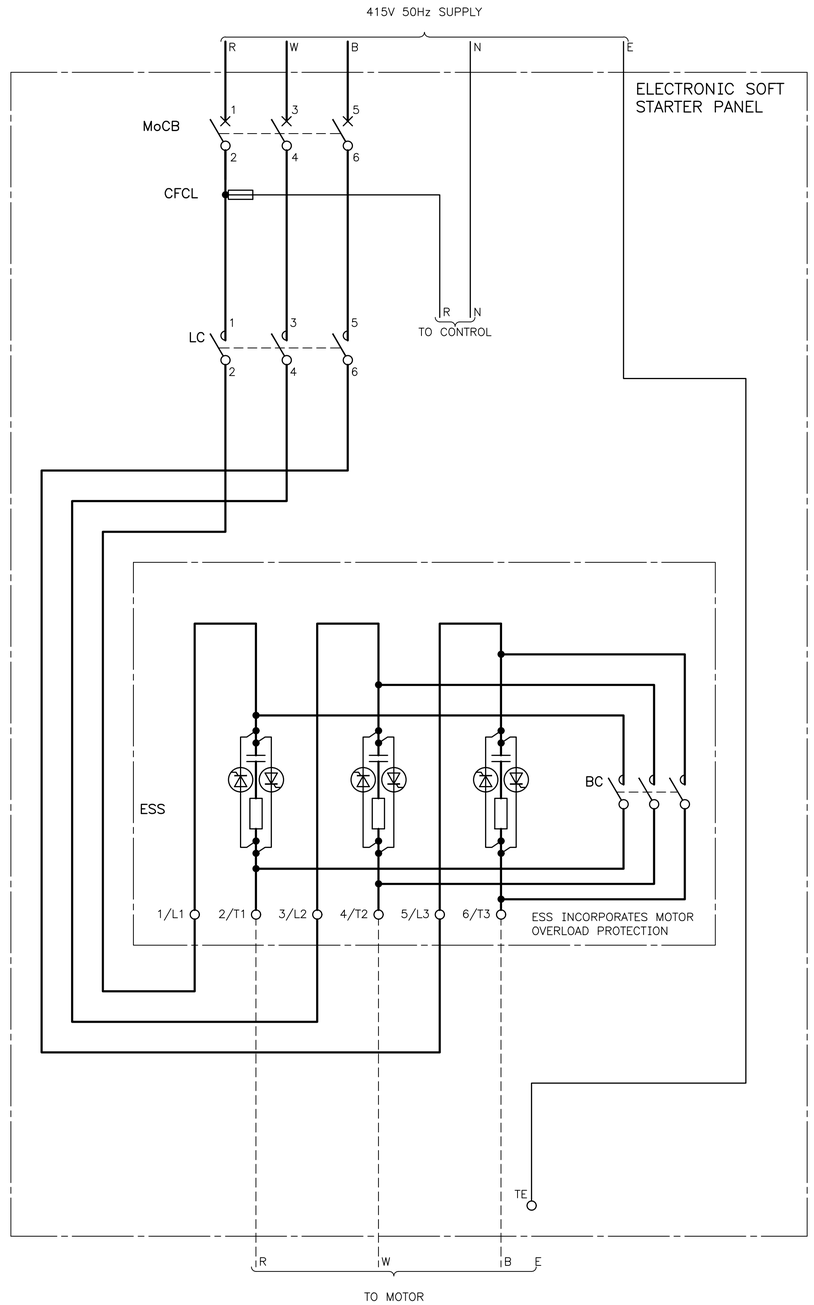

200.1A – 263A

CODE SCHEDULE

BC	BYPASS CONTACTOR
CFCL	CONTROL FAULT CURRENT LIMITER
ESS	ELECTRONIC SOFT STARTER
LC	LINE CONTACTOR
MoCB	MOTOR CIRCUIT BREAKER

ISSUE	DATE	GRID	REVISION	DRN	REC	APPD
C	01/2024		CFCL SYMBOL REVISED (100.1A–200A DIAGRAM)	SAM	TK	EG
B	03/2021		CURRENT RANGES AND POWER DIAGRAMS REVISED	PH	TL	EG

DESIGN SURVEY NONE | VERTICAL DATUM NONE | COORDINATE SYS NONE | ASCON SURVEY NONE | DES REF

DES CALC T LIU | DES CHD E GLIWSKI | DRN P HARVEY | Q.C. CHD S MEMORY

NORTH POINT

SUBMITTED 29/11/2019 T LIU (SIGNED) SENIOR ENGINEER – ELECTRICAL

RECOMMENDED 29/11/2019 E GLIWSKI (SIGNED) PRINCIPAL ENGINEER – ELECTRICAL

APPROVED 28/11/2019 N JOHNSON (SIGNED) SNR PRINCIPAL ENGINEER – ELECT

ENGINEERING

WATER CORPORATION

ELECTRICAL STANDARD SWITCHBOARD DESIGNS
SMALL PUMP STATIONS
MOTOR STARTER REFERENCE – BORE
ELECTRONIC SOFT STARTER – POWER DIAGRAM 100.1A – 263A

FILE | PLAN MN01–24–7.2 | CAD | ISSUE C | ORIGINAL SHEET SIZE A1

PROJECT | MF

STANDARDS\APPROVED\MN01\PREAPPROVAL\MN01–024–007–02C 17:19 12/01/2024 MEMORYSO/NB46194

© THIS DRAWING IS THE PROPERTY OF THE WATER CORPORATION. IT SHALL NOT BE COPIED WITHOUT PERMISSION.

566
810