DocuSign Envelope ID: 020ABBD3-B8C1-463B-9729-BDFF648BC32D

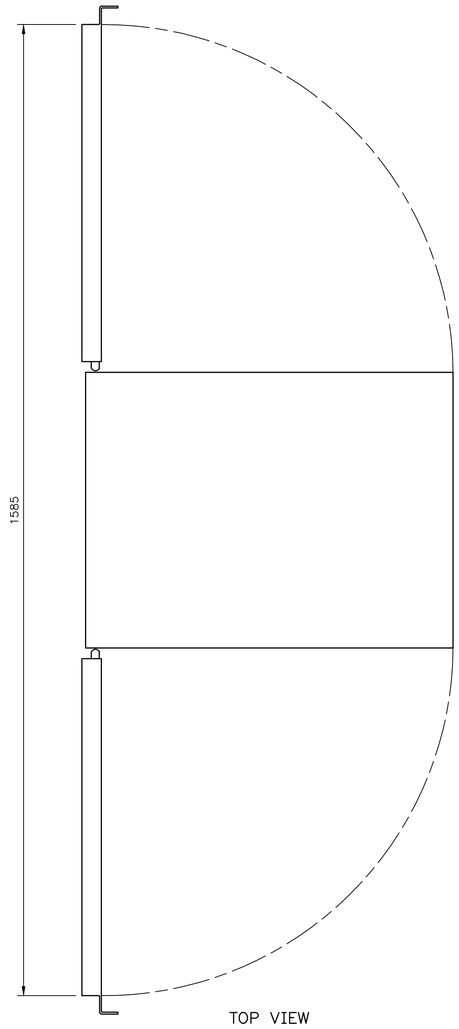

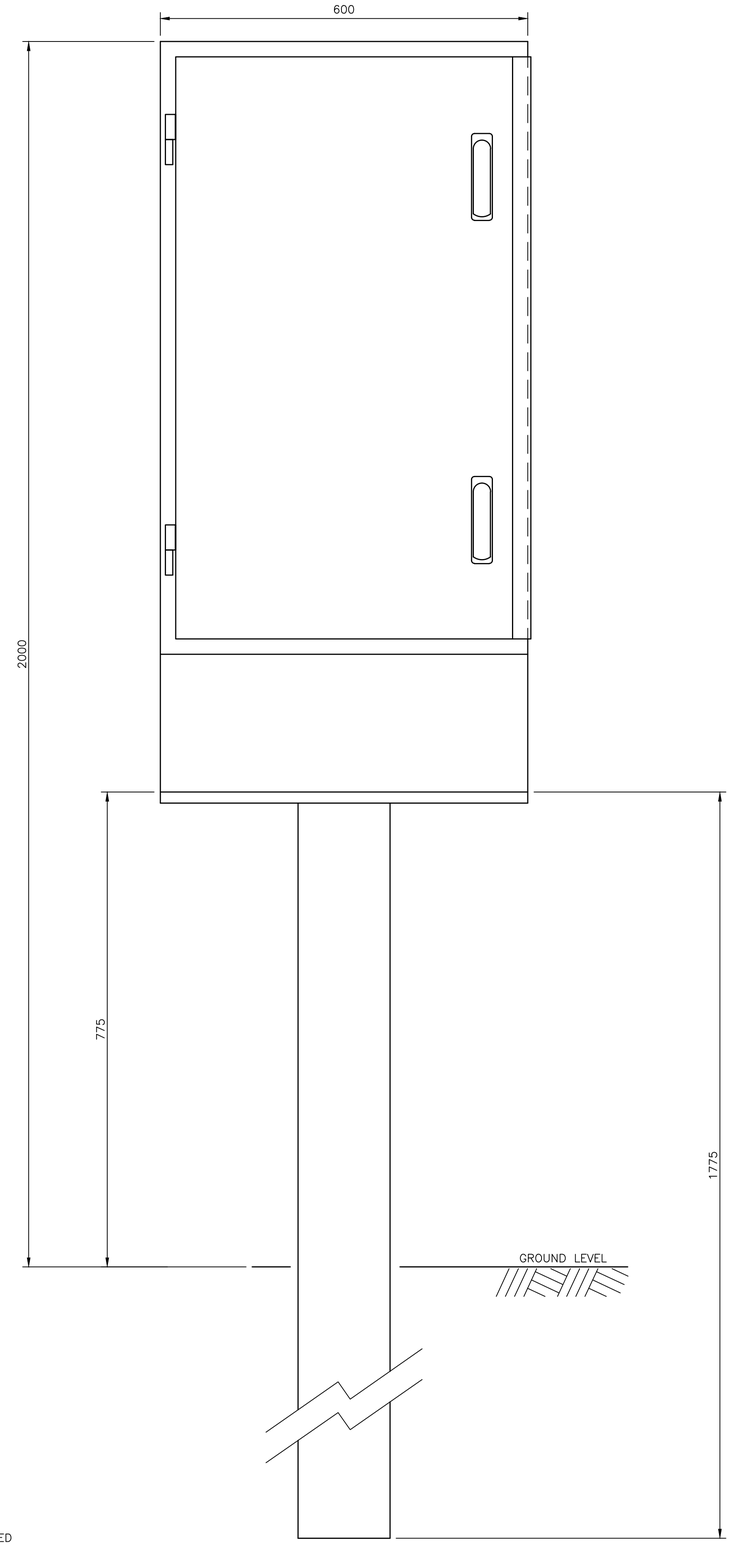

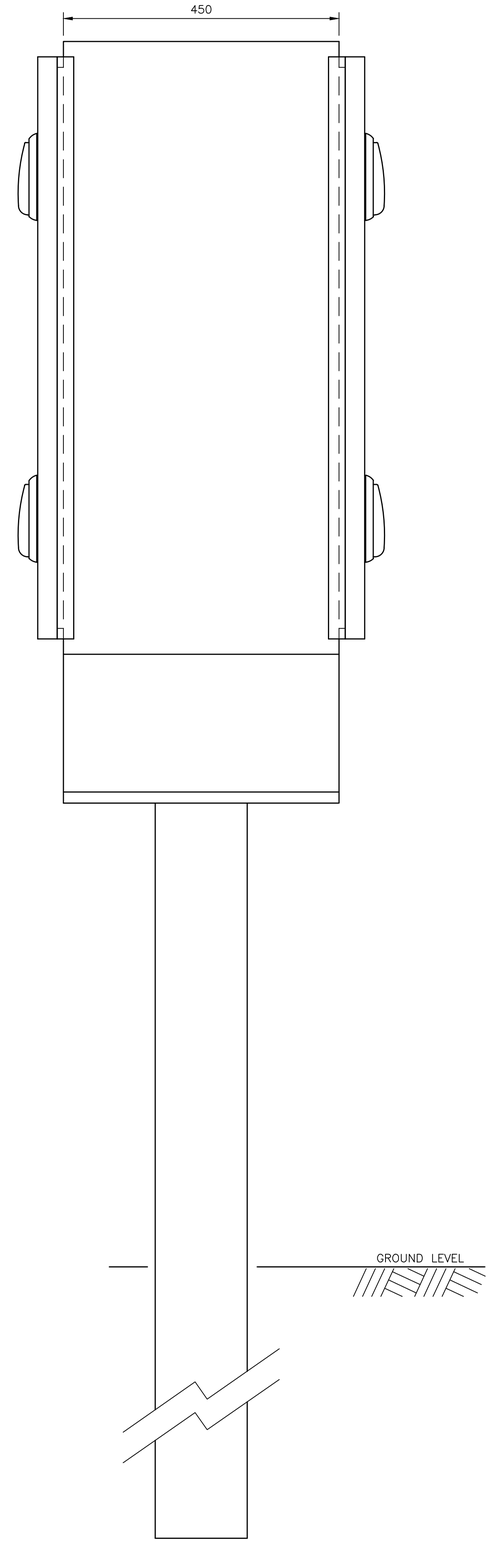

GENERAL NOTES

1. UNLESS OTHERWISE SHOWN ALL DIMENSIONS ARE IN MILLIMETRES
2. FRONT OF SWITCHBOARD AND DOOR OPENING ARRANGEMENT TO BE CLEARLY DEFINED ON SITE LAYOUT DRAWING
3. ONLY FOR 100A MAIN SWITCHBOARD MINI CUBICLE APPLICATIONS REFER TO MN01–1–4

100 50 0 100 200 300 mm

1:5 AT SHEET SIZE A1

ISSUE	DATE	GRID	REVISION	DRN	REC	APPD
B	10/2020		DOOR DETAILS REVISED	PH	~~EC~~ ~~EC~~	NJ

566
810

DESIGN SURVEY NONE	VERTICAL DATUM NONE	DES CALC T LIU	NORTH POINT
	COORDINATE SYS NONE	DES CHD E GLIWSKI	
ASCON SURVEY NONE	DES REF	DRN P HARVEY	
		Q.C. CHD S MEMORY	

SUBMITTED 29/11/2019
T LIU (SIGNED)
SENIOR ENGINEER – ELECTRICAL

RECOMMENDED 29/11/2019
E GLIWSKI (SIGNED)
PRINCIPAL ENGINEER – ELECTRICAL

APPROVED 28/11/2019
N JOHNSON (SIGNED)
SNR PRINCIPAL ENGINEER – ELECT

ENGINEERING

WATER CORPORATION

ELECTRICAL STANDARD SWITCHBOARD DESIGNS
SMALL PUMP STATIONS
SWITCHBOARD REFERENCE
MINI CUBICLE DIMENSIONS

FILE
PROJECT
PLAN MN01–21–3
CAD
ISSUE B
ORIGINAL SHEET SIZE A1
MF

© THIS DRAWING IS THE PROPERTY OF THE WATER CORPORATION. IT SHALL NOT BE COPIED WITHOUT PERMISSION.

STANDARDS\APPROVED\MN01\MN01–021–003–01B 08:10 23/10/2020 HARVEYPO/WS27105