DocuSign Envelope ID: 1FDA3626-97B5-486F-AC59-BE2DC00589B9

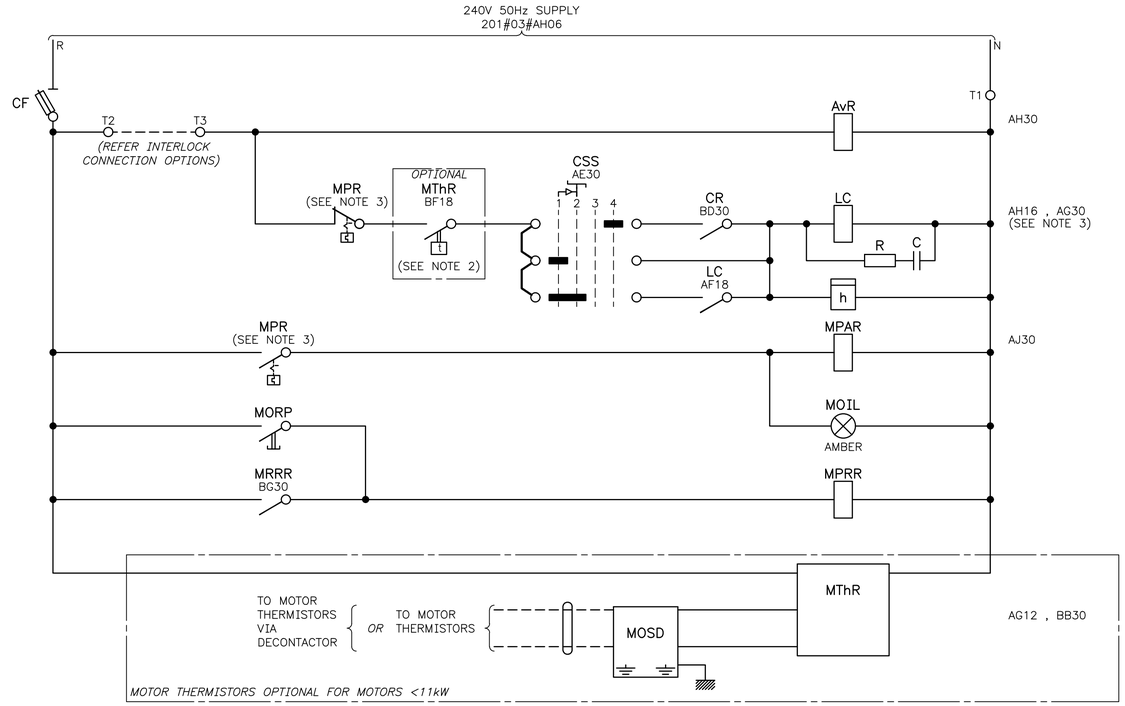

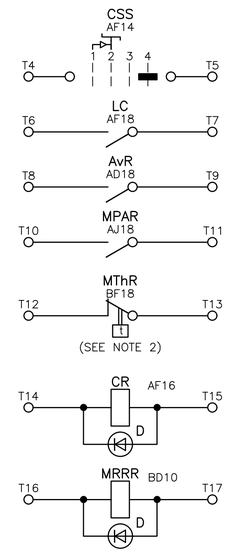

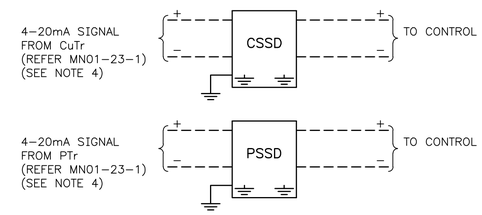

CONTROL INTERCONNECTIONS

REFERENCE EXPLANATION

(P)WXYZ
41#1.1#AB34

- PANEL LETTER
- CODE
- HORIZONTAL LOCATION
- VERTICAL LOCATION
- PART Nº (IF REQUIRED)
- SHEET Nº
- BUNDLE Nº

CONTROL SELECTOR SWITCH

POSITION	FUNCTION
1	LOCAL START
2	LOCAL RUN
3	OFF
4	NORMAL

CODE SCHEDULE

AvR	AVAILABLE RELAY
C	CAPACITOR
CF	CONTROL FUSE
CR	CONTROL RELAY
CSS	CONTROL SELECTOR SWITCH
CSSD	CURRENT SIGNAL SURGE DIVERTER
D	DIODE
ESpP	EMERGENCY STOP PUSHBUTTON
h	HOUR METER
LC	LINE CONTACTOR
MOIL	MOTOR OVERLOAD FAULT INDICATING LIGHT
MORP	MOTOR OVERLOAD FAULT RESET PUSHBUTTON
MOSD	MOTOR OVERTEMPERATURE SURGE DIVERTER
MPAR	MOTOR PROTECTION AUXILIARY RELAY
MPR	MOTOR PROTECTION RELAY
MPRR	MOTOR PROTECTION RELAY RESET
MRRR	MOTOR PROTECTION REMOTE RESET RELAY
MThR	MOTOR THERMISTOR RELAY
PSSD	POWER SIGNAL SURGE DIVERTER
R	RESISTOR

GENERAL NOTES

1. DRAWN NO POWER CONDITION
2. MOTOR THERMISTOR RELAY CONTACTS CHANGE STATE ON ENERGIZATION
3. FOR CONTACTOR MAIN POLES AND MPR COIL REFER TO MN01–23–1
4. POWER AND CURRENT SIGNAL SURGE DIVERTERS MAY BE OMITTED WHERE SWITCHBOARD AND CONTROL CUBICLE ARE MOUNTED ON THE SAME CONCRETE SLAB OR WHERE POWER SYSTEM INTERFACE IS USED

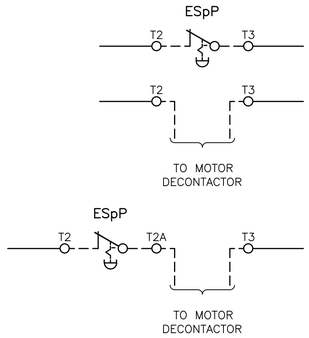

INTERLOCK CONNECTION OPTIONS

SELECTION DEPENDENT ON APPLICATION

ISSUE	DATE	GRID	REVISION	DRN	REC	APPD
F	01/2022		MThR CONTACT ADDED TO PRIMARY PROTECTION; PTMR DELETED	PH	~~TK~~	~~EG~~
E	03/2021		AvR CONTROL WIRING REVISED	PH	TL	EG
D	10/2020		AvR CONTROL WIRING REVISED	PH	EG	NJ
C	02/2019		CONTROL FUSE, 4TH LINE TITLE AND NOTE 4 REVISED	PH	EG	NJ
B	05/2018		INTERLOCK CONNECTION OPTIONS REVISED	PH	EF	KOG

DESIGN SURVEY NONE | VERTICAL DATUM NONE | COORDINATE SYS NONE | ASCON SURVEY NONE | DES REF | DES CALC E FONG | DES CHD K O'GRADY | DRN P HARVEY | Q.C. CHD S MEMORY | NORTH POINT

ENGINEERING

SUBMITTED 24/07/2017 E FONG (SIGNED) SENIOR ENGINEER – ELECTRICAL

RECOMMENDED 24/07/2017 K O'GRADY (SIGNED) PRINCIPAL ENGINEER – ELECTRICAL

APPROVED 24/07/2017 N JOHNSON (SIGNED) SNR PRINCIPAL ENGINEER – ELECT

WATER CORPORATION

ELECTRICAL STANDARD SWITCHBOARD DESIGNS
SMALL PUMP STATIONS
MOTOR STARTER REFERENCE – WATER
DOL STARTER – CONTROL DIAGRAM 0.2A – 100A

FILE | PROJECT | PLAN MN01–23–2 | CAD | ISSUE F | ORIGINAL SHEET SIZE A1 | MF

© THIS DRAWING IS THE PROPERTY OF THE WATER CORPORATION. IT SHALL NOT BE COPIED WITHOUT PERMISSION.

STANDARDS\APPROVED\MN01\MN01–023–002–01F 14:39 25/03/2022 HARVEYPO/NB46193

566
810