DocuSign Envelope ID: 24381753-08F0-4DCD-B103-7A44A7082BFA

ESS PARAMETERS

PARAMETER	DESCRIPTION	SETTING	COMMENTS
1–2	MOTOR FULL LOAD CURRENT	**A	
1–3	MOTOR kW	**kW	
1–4	LOCKED ROTOR TIME	**:** MIN:SEC	
1–5	LOCKED ROTOR CURRENT	***%	
1–6	MOTOR SERVICE FACTOR	***%	
2–1	START MODE	**	
2–2	START RAMP TIME	**:** MIN:SEC	TO MAXIMUM 15s
2–3	INITIAL CURRENT	***%	
2–4	CURRENT LIMIT	***%	TO MAXIMUM 350%
2–5	ADAPTIVE START PROFILE	**	
2–9	STOP MODE	**	
2–10	STOP TIME	**:** MIN:SEC	TO MAXIMUM 15s
2–11	ADAPTIVE STOP PROFILE	**	
2–12	ADAPTIVE CONTROL GAIN	**%	
5–16	RESTART DELAY	00:01 MIN:SEC	
5–17	STARTS PER HOUR	**	TO MAXIMUM 5
6–3	CURRENT IMBALANCE	LOG ONLY	
6–4	UNDERCURRENT	LOG ONLY	
6–5	OVERCURRENT	LOG ONLY	
6–6	UNDERVOLTAGE	LOG ONLY	
6–7	OVERVOLTAGE	LOG ONLY	
6–10	EXCESS START TIME	TRIP STARTER	
6–11	INPUT A	LOG ONLY	
6–12	INPUT B	LOG ONLY	
6–13	NETWORK COMMS	LOG ONLY	
6–14	REMOTE KEYPAD	LOG ONLY	
6–15	FREQUENCY	TRIP STARTER	
6–16	PHASE SEQUENCE	LOG ONLY	
6–17	MOTOR OVER TEMPERATURE	TRIP STARTER	
6–18	MOTOR THERMISTOR	LOG ONLY	
6–19	SHORTED SCR	TRIP STARTER	
6–20	BATTERY/CLOCK	LOG ONLY	
7–9	RESET/ENABLE LOGIC	NORMALLY OPEN	
8–1	RELAY A FUNCTION	OFF	
8–4	RELAY B FUNCTION	TRIP STARTER	

INSTRUCTIONS FOR USE

1. *ASTERISKS INDICATE APPLICATION SPECIFIC VALUES THAT SHALL BE NOMINATED BY DETAIL DESIGNER*
2. *PARAMETERS NOT LISTED REMAIN AT DEFAULT VALUES*
3. *STANDARD REGISTERS FOR PUMP MONITORING:*
   - *CURRENT 40005 4.1A–89A*
   - *AVERAGE 3 PHASE POWER 40608 89.1A–100A*
4. *FOR ESS PARAMETERS TO FUNCTION ETHERNET CARD NEEDS TO BE SET TO LEGACY MODE BY RESETTING REGISTER 40001 TO 0*
5. *PARAMETER GROUP 12 COMMUNICATIONS CARD SETTINGS TO BE DEFINED BY OPERATIONS TECHNOLOGY*

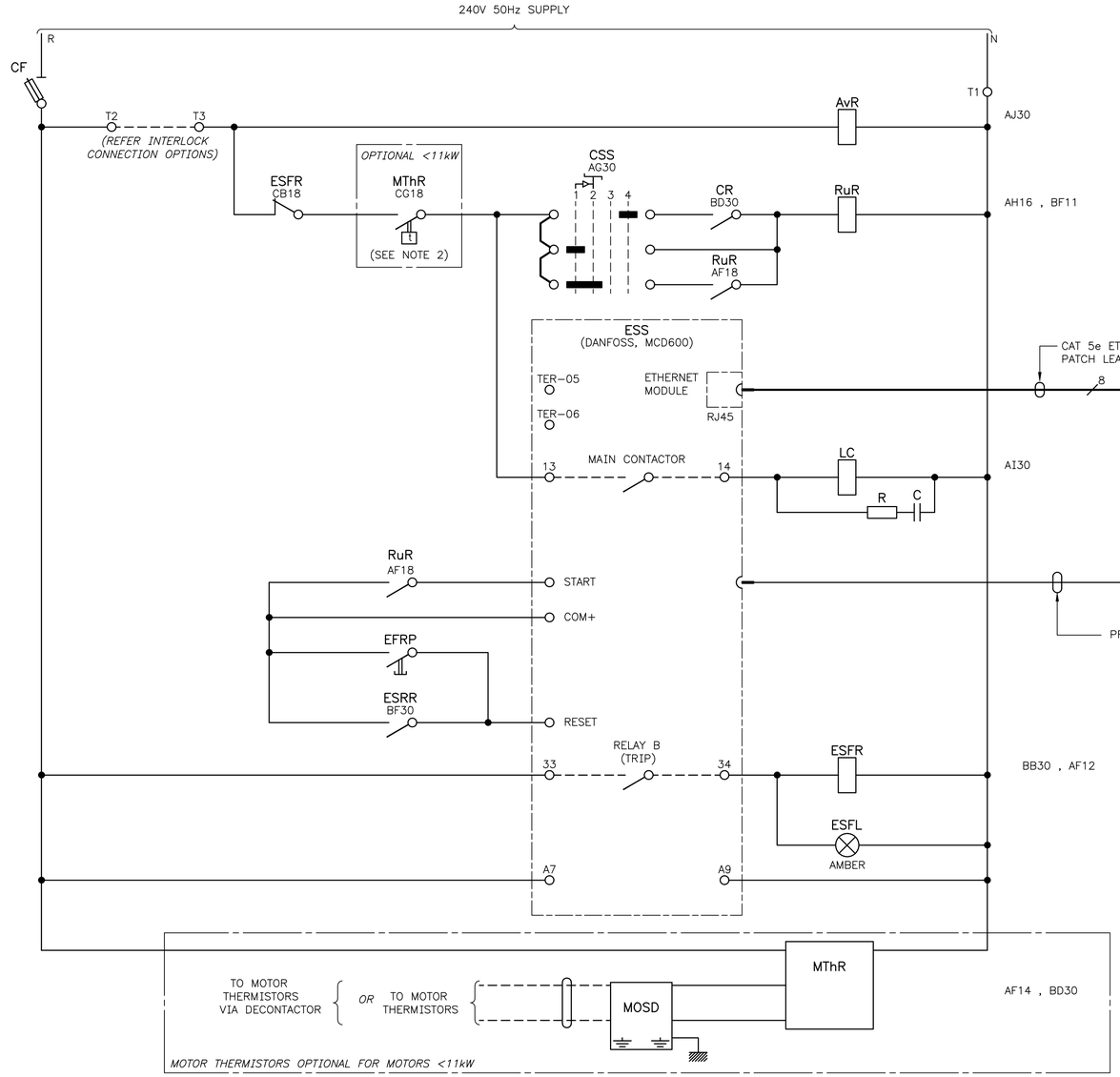

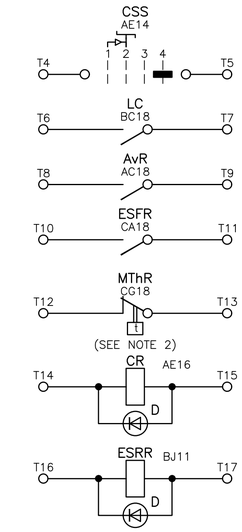

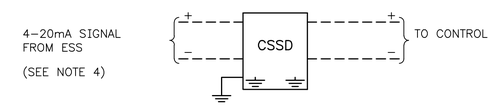

CONTROL INTERCONNECTIONS

CODE SCHEDULE

AvR	AVAILABLE RELAY
C	CAPACITOR
CF	CONTROL FUSE
CR	CONTROL RELAY
CSS	CONTROL SELECTOR SWITCH
CSSD	CURRENT SIGNAL SURGE DIVERTER
D	DIODE
EFRP	ELECTRONIC SOFT STARTER FAULT RESET PUSHBUTTON
ESFL	ELECTRONIC SOFT STARTER FAULT INDICATING LIGHT
ESFR	ELECTRONIC SOFT STARTER FAULT RELAY
ESpP	EMERGENCY STOP PUSHBUTTON
ESRR	ELECTRONIC SOFT STARTER REMOTE RESET RELAY
ESS	ELECTRONIC SOFT STARTER
LC	LINE CONTACTOR
LCP	LOCAL CONTROL PANEL
MOSD	MOTOR OVERTEMPERATURE SURGE DIVERTER
MThR	MOTOR THERMISTOR RELAY
R	RESISTOR
RuR	RUN RELAY

CONTROL SELECTOR SWITCH

POSITION	FUNCTION
1	LOCAL START
2	LOCAL RUN
3	OFF
4	NORMAL

REFERENCE EXPLANATION

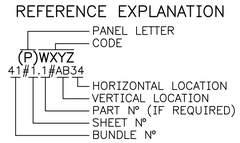

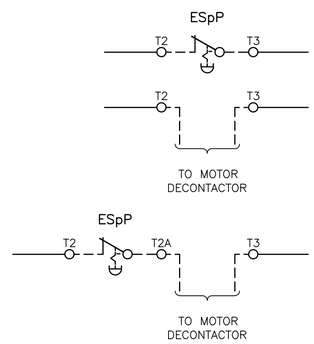

INTERLOCK CONNECTION OPTIONS

SELECTION DEPENDENT ON APPLICATION

GENERAL NOTES

1. DRAWN NO POWER CONDITION
2. MOTOR THERMISTOR RELAY CONTACTS CHANGE STATE ON ENERGIZATION
3. FOR CONTACTOR MAIN POLES REFER TO MN01–23–7
4. CURRENT SIGNAL SURGE DIVERTER MAY BE OMITTED WHERE SWITCHBOARD AND CONTROL CUBICLE ARE MOUNTED ON THE SAME CONCRETE SLAB OR WHERE POWER SYSTEM INTERFACE IS USED

ISSUE	DATE	GRID	REVISION	DRN	REC	APPD
H	01/2024		COMMUNICATIONS REVISED	SAM	TL	EG
G	01/2022		MThR CONTACT ADDED TO PRIMARY PROTECTION; PTMR DELETED COMMUNICATION CHANGED TO ETHERNET	PH	TL	EG
F	03/2021		REVISED FOR MCD600	PH	TL	EG
E	10/2020		AvR CONTROL WIRING REVISED	PH	EG	NJ
D	11/2019		4TH LINE TITLE AND DRAWING NUMBER REVISED	PH	EG	NJ
C	02/2019		CONTROL FUSE AND NOTE 4 REVISED	PH	EG	NJ

566
810

DESIGN SURVEY NONE
ASCON SURVEY NONE
VERTICAL DATUM NONE
COORDINATE SYS NONE
DES REF
DES CALC E FONG
DES CHD K O'GRADY
DRN P HARVEY
Q.C. CHD S MEMORY
NORTH POINT

ENGINEERING

SUBMITTED 24/07/2017 E FONG (SIGNED) SENIOR ENGINEER – ELECTRICAL
RECOMMENDED 24/07/2017 K O'GRADY (SIGNED) PRINCIPAL ENGINEER – ELECTRICAL
APPROVED 24/07/2017 N JOHNSON (SIGNED) SNR PRINCIPAL ENGINEER – ELECT

WATER CORPORATION

ELECTRICAL STANDARD SWITCHBOARD DESIGNS
SMALL PUMP STATIONS
MOTOR STARTER REFERENCE – WATER
ELECTRONIC SOFT STARTER – CONTROL DIAGRAM 4.1A – 100A

FILE
PROJECT
PLAN MN01–23–8.1
CAD
ISSUE H
ORIGINAL SHEET SIZE A1
MF

© THIS DRAWING IS THE PROPERTY OF THE WATER CORPORATION. IT SHALL NOT BE COPIED WITHOUT PERMISSION.

STANDARDS\APPROVED\MN01\PREAPPROVAL\MN01–023–008–01H 17:19 12/01/2024 MEMORYSO/NB46194