DocuSign Envelope ID: ACD6EF36-0C12-492E-847D-213A14613C85

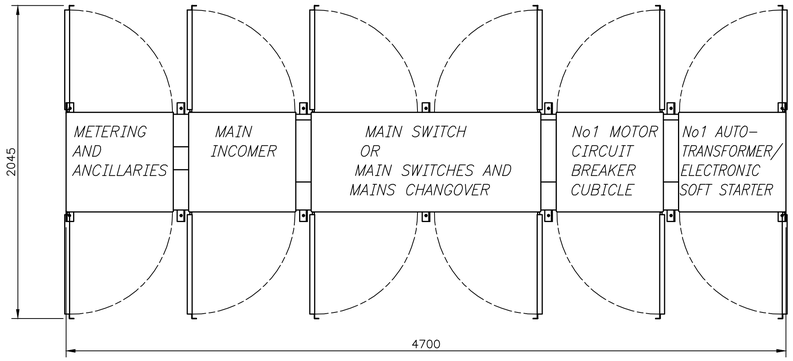

MAIN SWITCHBOARD (SINGLE SWITCHBOARD SITE)
(ONE STARTER APPLICATIONS)

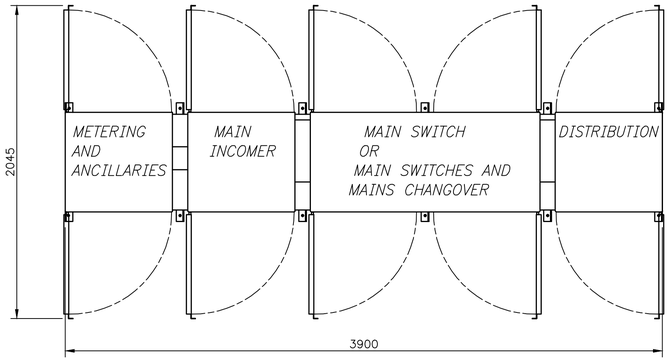

MAIN SWITCHBOARD (MULTIPLE SWITCHBOARD SITE)
(SUPPLY AUTHORITY, STANDBY AND SOLAR SUPPLY APPLICATIONS WITH SINGLE OR MULTIPLE FEEDERS)

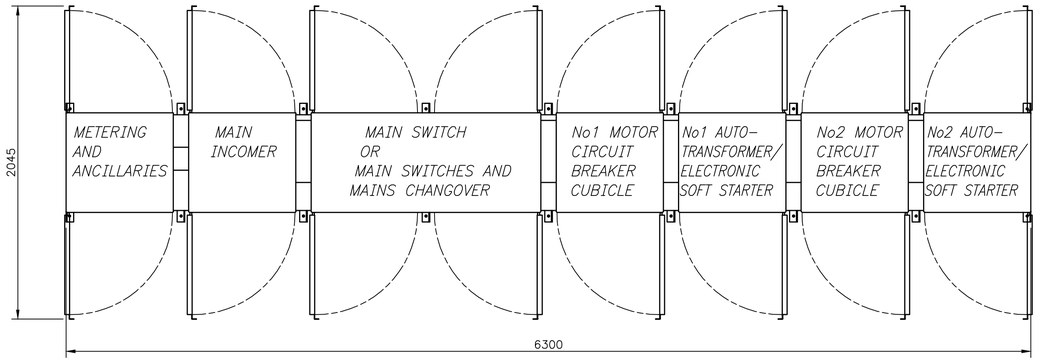

MAIN SWITCHBOARD (SINGLE SWITCHBOARD SITE)
(TWO STARTER APPLICATIONS)

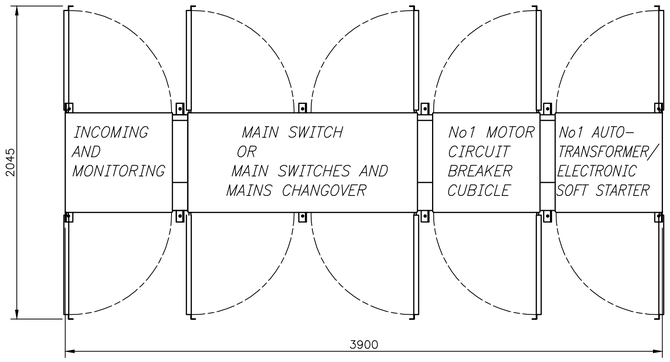

PUMP STATION SWITCHBOARD (MULTIPLE SWITCHBOARD SITE)

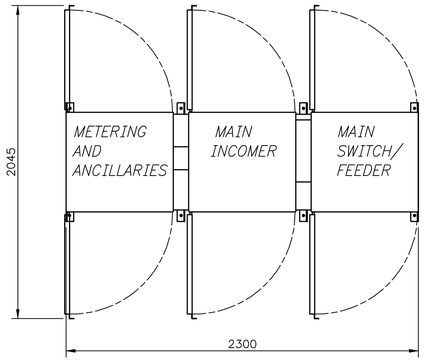

MAIN SWITCHBOARD (MULTIPLE SWITCHBOARD SITE)
(SUPPLY AUTHORITY SUPPLY APPLICATIONS ONLY WITH SINGLE FEEDER ONLY)

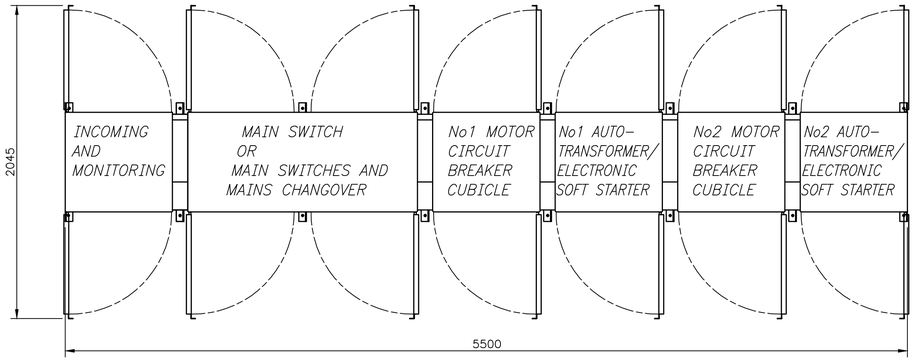

PUMP STATION SWITCHBOARD (MULTIPLE SWITCHBOARD SITE)
(TWO STARTER APPLICATIONS)

GENERAL NOTES

1. UNLESS OTHERWISE SHOWN ALL DIMENSIONS ARE IN MILLIMETRES
2. DOORS CAN BE LEFT OR RIGHT HAND OPENING TO SUIT PROJECT REQUIREMENTS

500 0 500 1000 mm

1:20 AT SHEET SIZE A1

ISSUE	DATE	GRID	REVISION	DRN	REC	APPD
B	03/2021		SWITCHBOARD DOORS AND DOOR ARRANGEMENTS REVISED	PH	TK	EG EC

DESIGN SURVEY NONE | VERTICAL DATUM NONE | COORDINATE SYS NONE | ASCON SURVEY NONE | DES REF

DES CALC T LIU | DES CHD E GLIWSKI | DRN P HARVEY | Q.C. CHD S MEMORY

NORTH POINT

SUBMITTED 29/11/2019 T LIU (SIGNED) SENIOR ENGINEER – ELECTRICAL

RECOMMENDED 29/11/2019 E GLIWSKI (SIGNED) PRINCIPAL ENGINEER – ELECTRICAL

APPROVED 28/11/2019 N JOHNSON (SIGNED) SNR PRINCIPAL ENGINEER – ELECT

ENGINEERING

WATER CORPORATION

ELECTRICAL STANDARD SWITCHBOARD DESIGNS
SMALL PUMP STATIONS
SWITCHBOARD REFERENCE
MK9 OUTDOOR SWITCHBOARD – SWITCHBOARD SIZING

FILE | PROJECT | PLAN MN01-21-2.2 | CAD | ISSUE B | ORIGINAL SHEET SIZE A1 | MF

566 810

© THIS DRAWING IS THE PROPERTY OF THE WATER CORPORATION. IT SHALL NOT BE COPIED WITHOUT PERMISSION.

STANDARDS\APPROVED\MN01\MN01-021-002-02B 11:19 05/03/2021 HARVEYPO/WS27105