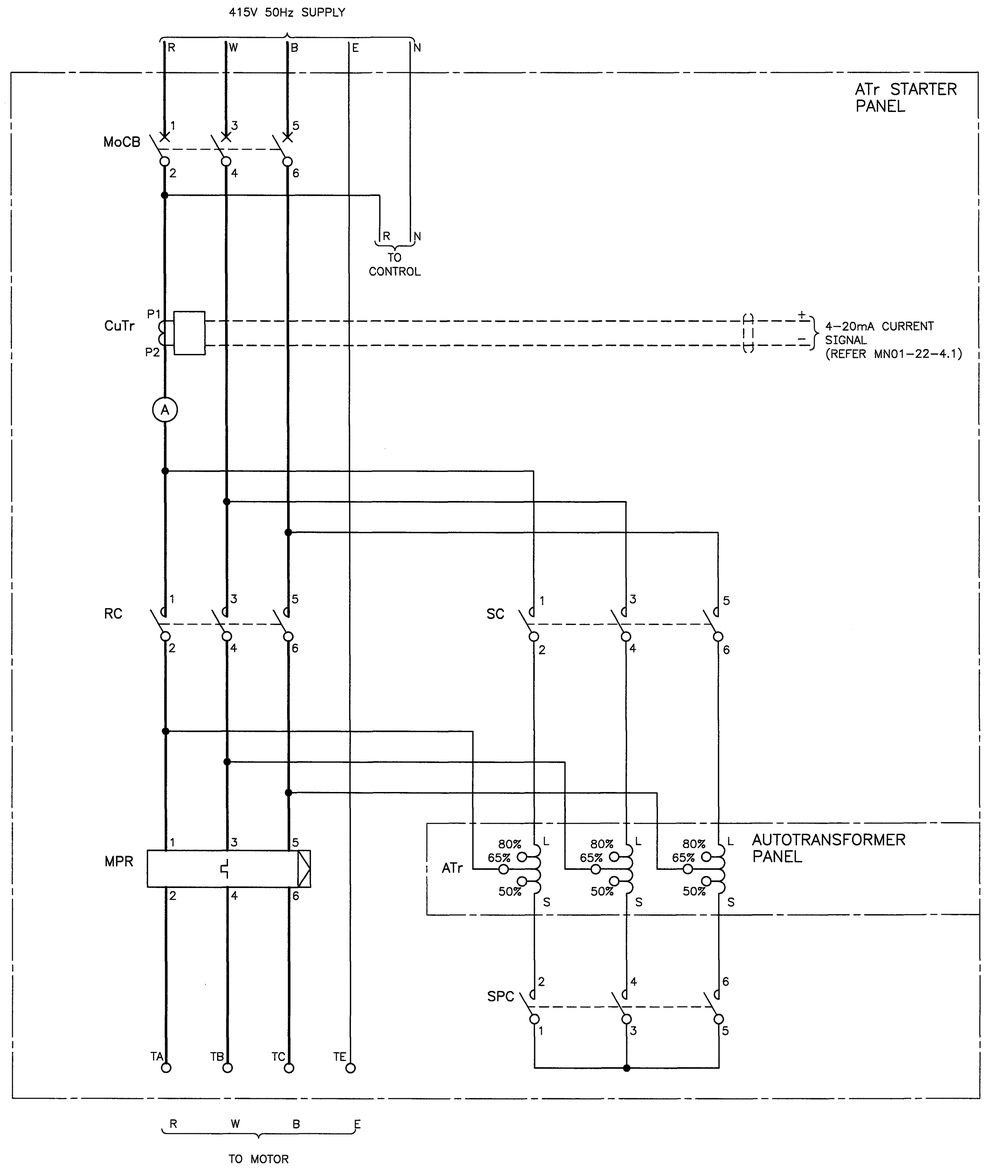

5.4A – 21A

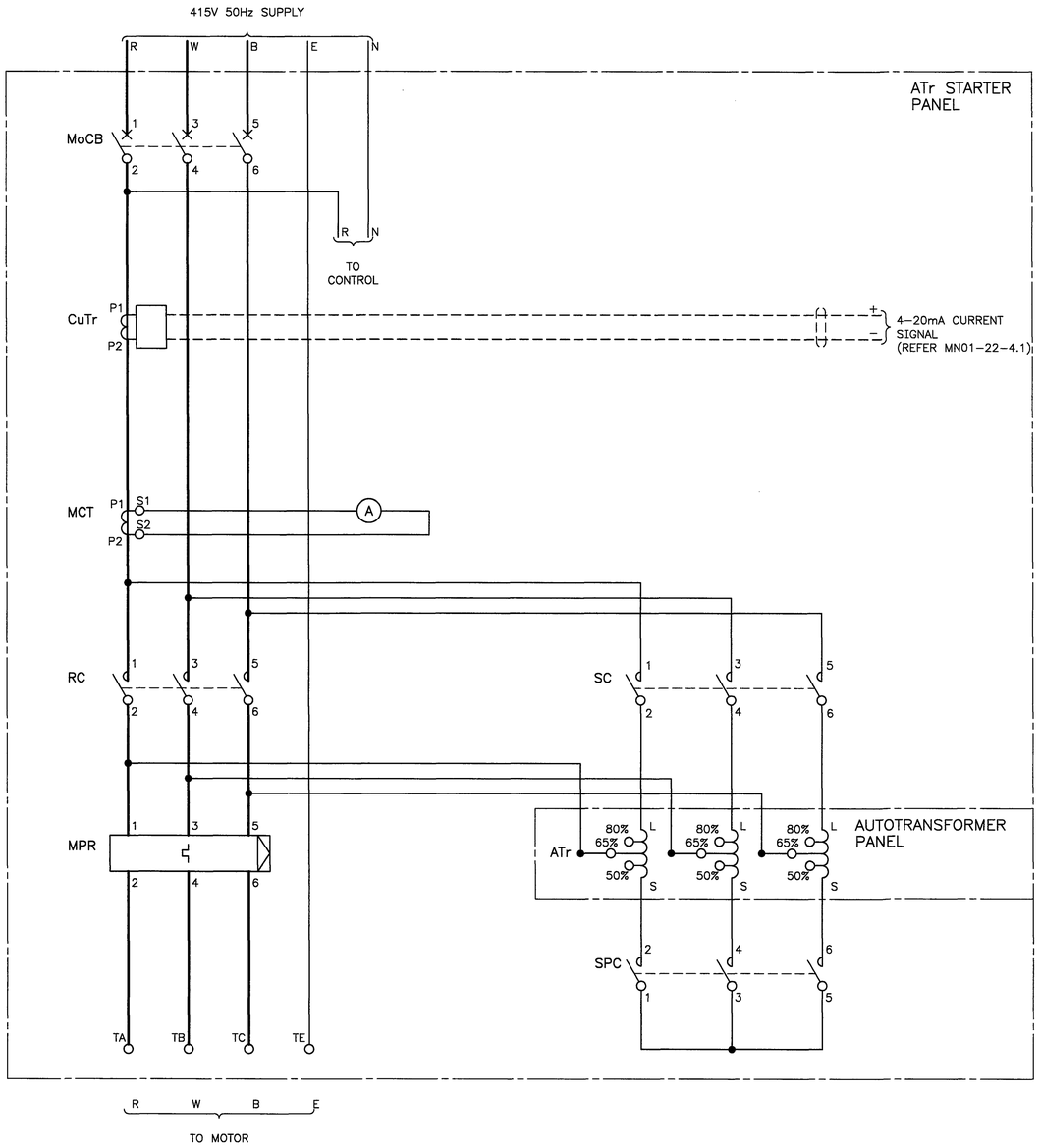

21.1A – 89A

CODE SCHEDULE

A	AMMETER
ATr	AUTOTRANSFORMER
CuTr	CURRENT TRANSFORMER AND TRANSDUCER
MCT	METERING CURRENT TRANSFORMER
MoCB	MOTOR CIRCUIT BREAKER
MPR	MOTOR PROTECTION RELAY
RC	RUN CONTACTOR
SC	START CONTACTOR
SPC	STAR POINT CONTACTOR

ISSUE	DATE	GRID	REVISION	DRN	REC	APPD
B	02/2019		DRAWING REFERENCE REVISED		EG	

DESIGN SURVEY NONE | VERTICAL DATUM NONE | COORDINATE SYS NONE | ASCON SURVEY NONE | DES REF | DES CALC E FONG | DES CHD K O'GRADY | DRN P HARVEY | Q.C. CHD S MEMORY | NORTH POINT

SUBMITTED 24/07/2017 E FONG (SIGNED) SENIOR ENGINEER – ELECTRICAL

RECOMMENDED 24/07/2017 K O'GRADY (SIGNED) PRINCIPAL ENGINEER – ELECTRICAL

APPROVED 24/07/2017 N JOHNSON (SIGNED) SNR PRINCIPAL ENGINEER – ELECT

ENGINEERING

WATER CORPORATION

ELECTRICAL STANDARD SWITCHBOARD DESIGNS
SMALL PUMP STATIONS
MOTOR STARTER REFERENCE – WASTEWATER
ATr STARTER – POWER DIAGRAMS 5.4A – 89A

FILE | PLAN MN01–22–3.1 | CAD | ISSUE B | ORIGINAL SHEET SIZE A1

PROJECT

MF 26 FEB 2019

© THIS DRAWING IS THE PROPERTY OF THE WATER CORPORATION. IT SHALL NOT BE COPIED WITHOUT PERMISSION.

STANDARDS\APPROVED\MN01\MN01–022–003–01B 09:55 25/02/2019 harveyp0/WS27105

566 810