DocuSign Envelope ID: D02654E8-1738-4B59-B551-4B2FDB7E3BF1

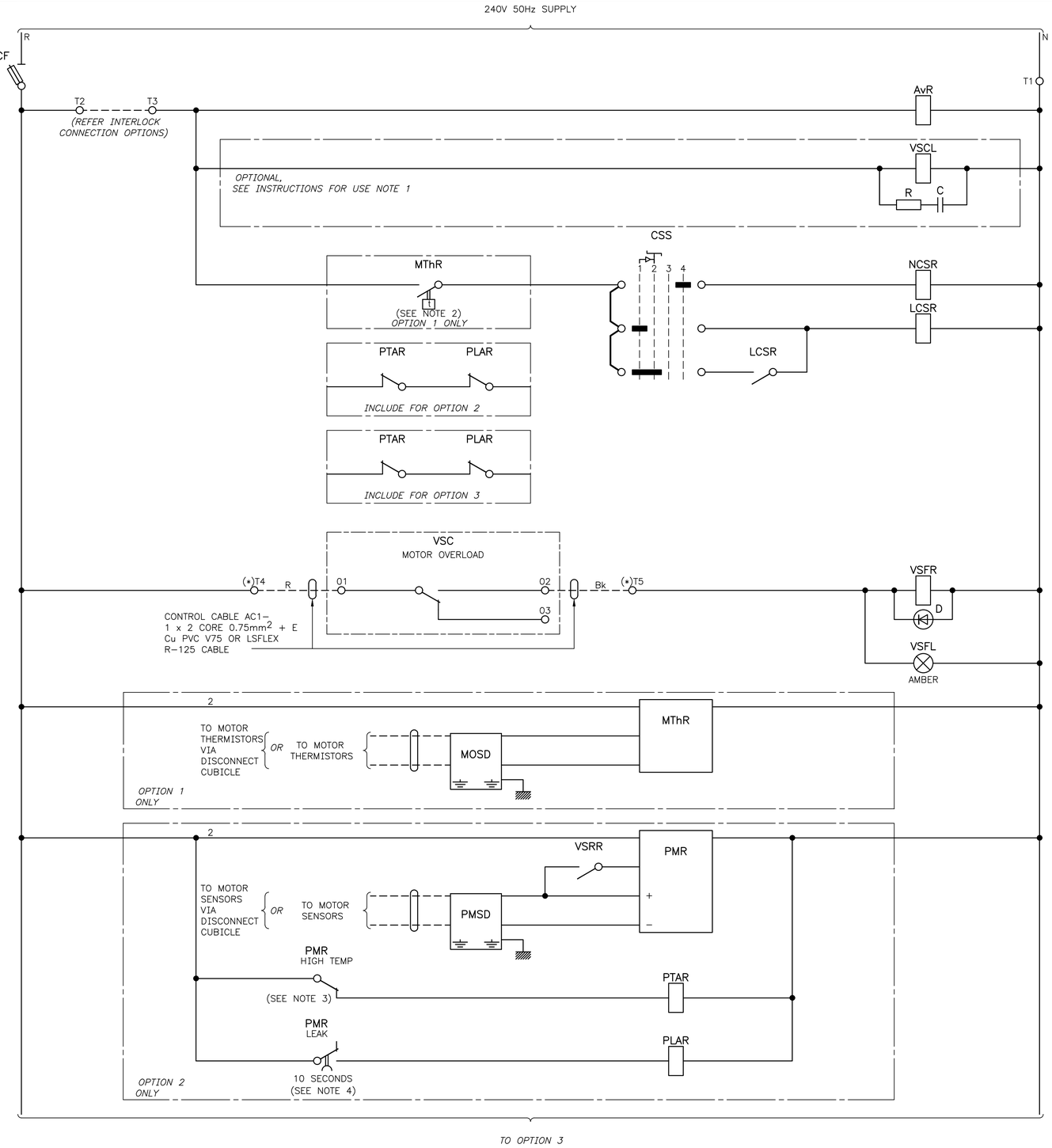

CONTROL SELECTOR SWITCH

POSITION	FUNCTION
1	LOCAL START
2	LOCAL RUN
3	OFF
4	NORMAL

CODE SCHEDULE

AvR	AVAILABLE RELAY
C	CAPACITOR
CF	CONTROL FUSE
CR	CONTROL RELAY
CSS	CONTROL SELECTOR SWITCH
D	DIODE
ESpP	EMERGENCY STOP PUSHBUTTON
LCSR	LOCAL CONTROL SELECTED RELAY
MOSD	MOTOR OVERTEMPERATURE SURGE DIVERTER
MThR	MOTOR THERMISTOR RELAY
NCSR	NORMAL CONTROL SELECTED RELAY
PLAR	PUMP LEAK ALARM RELAY
PMR	PUMP MONITORING RELAY
PMSD	PUMP MONITORING SURGE DIVERTER
PTAR	PUMP MOTOR HIGH TEMPERATURE ALARM RELAY
R	RESISTOR
VSC	VARIABLE SPEED CONTROLLER
VSCL	VARIABLE SPEED CONTROLLER LINE CONTACTOR
VSFL	VARIABLE SPEED CONTROLLER FAULT INDICATING LIGHT
VSFR	VARIABLE SPEED CONTROLLER FAULT RELAY
VSRR	VARIABLE SPEED CONTROLLER REMOTE RESET RELAY

OPTION TABLE

No	DESCRIPTION
1	MOTOR WITH THERMISTORS
2	MOTOR WITH THERMAL SWITCH AND STATOR LEAK SENSOR (FLYGT MINICAS II)
3	MOTOR WITH STATOR TEMPERATURE SWITCH AND STATOR THERMAL SENSORS. INCLUDES BEARING, CURRENT, LEAK AND VIBRATION SENSORS (FLYGT MAS801)

REFERENCE EXPLANATION

(P)WXYZ
41#1.1#AB34

- PANEL LETTER
- CODE
- HORIZONTAL LOCATION
- VERTICAL LOCATION
- PART Nº (IF REQUIRED)
- SHEET Nº
- BUNDLE Nº

INSTRUCTIONS FOR USE

1. *INCLUDE VARIABLE SPEED CONTROLLER LINE CONTACTOR FOR APPLICATIONS REQUIRING MOTOR DECONTACTORS AND/OR EMERGENCY STOP PUSHBUTTONS, OTHERWISE LINE CONTACTOR NOT INSTALLED AND THE VSC TO REMAIN CONTINUOUSLY ENERGISED*

GENERAL NOTES

1. DRAWN NO POWER CONDITION
2. MOTOR THERMISTOR RELAY CONTACTS CHANGE STATE ON ENERGIZATION
3. PUMP MONITORING RELAY 'HIGH TEMP ALARM' CONTACT CHANGES STATE ON ENERGIZATION
4. PUMP MONITORING RELAY 'LEAK ALARM' CONTACT DOES NOT CHANGE STATE ON ENERGIZATION

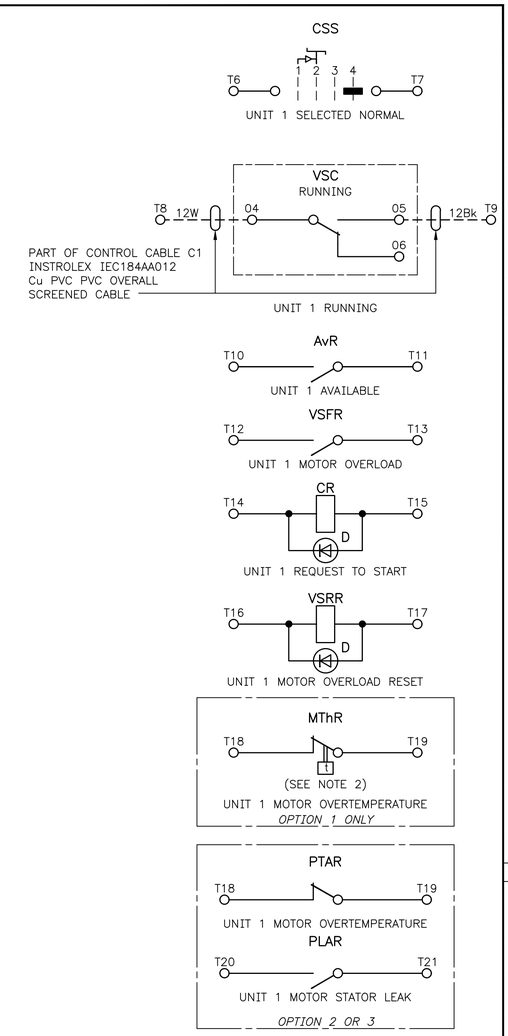

CONTROL INTERCONNECTIONS

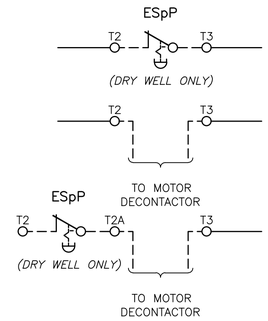

INTERLOCK CONNECTION OPTIONS

SELECTION DEPENDENT ON APPLICATION

ISSUE	DATE	GRID	REVISION	DRN	REC	APPD

DESIGN SURVEY NONE | VERTICAL DATUM NONE | COORDINATE SYS NONE | ASCON SURVEY NONE | DES REF

DES CALC S GILMOUR | DES CHD T LIU | DRN SA MEMORY | Q.C. CHD P HARVEY

NORTH POINT

SUBMITTED 16/06/2023 SA MEMORY (SIGNED) SENIOR TECHNICAL ADVISOR – ELECT

RECOMMENDED 16/06/2023 S GILMOUR (SIGNED) SENIOR ENGINEER – ELECTRICAL

APPROVED 16/06/2023 T LIU (SIGNED) PRINCIPAL ENGINEER – ELECTRICAL

ENGINEERING

WATER CORPORATION

ELECTRICAL STANDARD SWITCHBOARD DESIGNS
SMALL PUMP STATIONS
MOTOR STARTER REFERENCE – WASTEWATER
VARIABLE SPEED CONTROLLER – CONTROL DIAGRAM – PART 2

FILE | PROJECT | PLAN MN01–22–6.2 | CAD | ISSUE A | ORIGINAL SHEET SIZE A1 | MF

566
810

© THIS DRAWING IS THE PROPERTY OF THE WATER CORPORATION. IT SHALL NOT BE COPIED WITHOUT PERMISSION.

STANDARDS\APPROVED\MN01\MN01–022–006–02A 10:42 16/06/2023 MEMORYSO/NB46194