DocuSign Envelope ID: 17801A6B-2A60-4CFC-B2C3-1ECB6A53F576

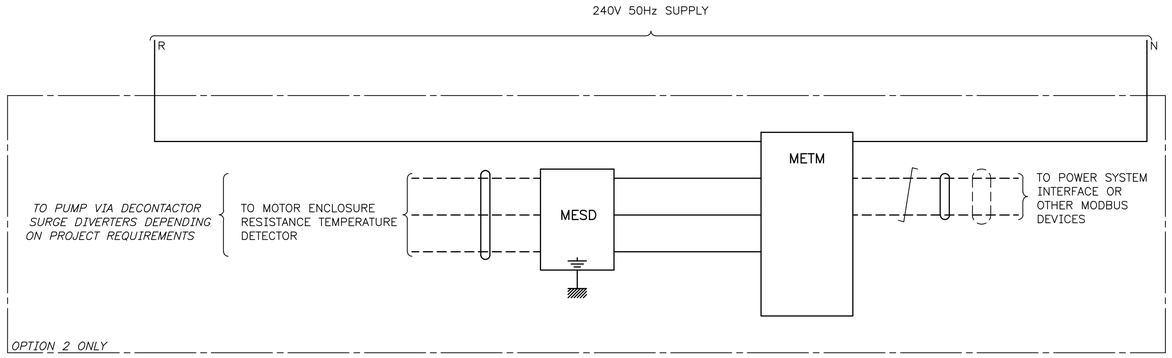

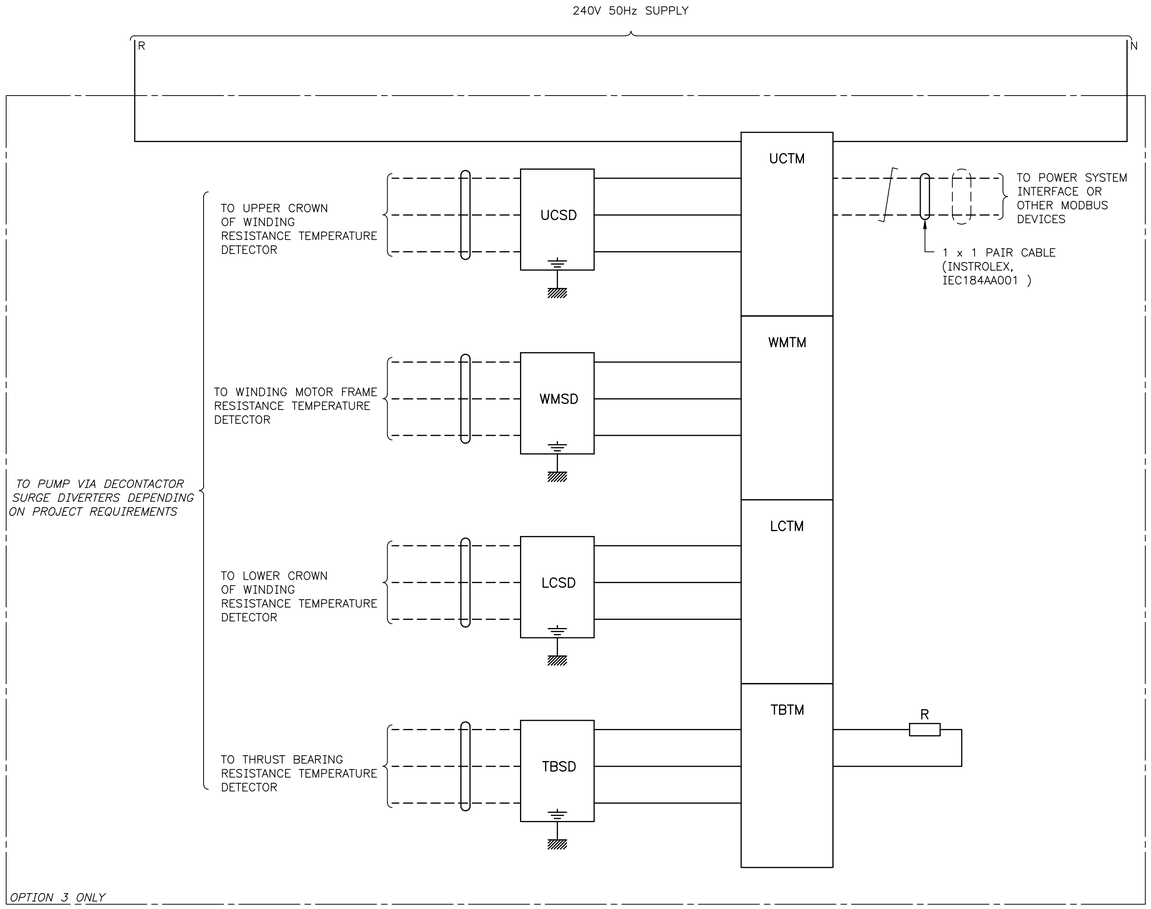

REFERENCE EXPLANATION

(P)WXYZ
41#1.1#AB34

- PANEL LETTER
- CODE
- HORIZONTAL LOCATION
- VERTICAL LOCATION
- PART Nº (IF REQUIRED)
- SHEET Nº
- BUNDLE Nº

CODE SCHEDULE

LCSD	LOWER CROWN OF WINDING TEMPERATURE SURGE DIVERTER
LCTM	LOWER CROWN OF WINDING TEMPERATURE MONITOR
MESD	MOTOR ENCLOSURE TEMPERATURE SURGE DIVERTER
METM	MOTOR ENCLOSURE TEMPERATURE MONITOR
R	RESISTOR
TBSD	THRUST BEARING TEMPERATURE SURGE DIVERTER
TBTM	THRUST BEARING TEMPERATURE MONITOR
UCSD	UPPER CROWN OF WINDING TEMPERATURE SURGE DIVERTER
UCTM	UPPER CROWN OF WINDING TEMPERATURE MONITOR
WMSD	WINDING MOTOR FRAME TEMPERTURE SURGE DIVERTER
WMTM	WINDING MOTOR FRAME TEMPERATURE MONITOR

OPTION TABLE

No	DESCRIPTION
1	MOTOR WITH THERMISTORS
2	MOTOR WITH 1 RESISTANCE TEMPERATURE DETECTOR
3	MOTOR WITH 4 RESISTANCE TEMPERATURE DETECTORS

INSTRUCTIONS FOR USE

1. *IF THE RTD SENSOR LOCATED WITHIN THE MOTOR ENCLOSURE IS IN A SPECIFIC LOCATION AND ITS LOCATION IS REQUIRED TO BE IDENTIFIED FOR PROJECT PURPOSES. THE METM AND MESD CODES AND DESCRIPTIONS CAN BE RENAMED INLINE WITH CODES AND DESCRIPTIONS ASSIGNED FOR FOUR RTD MOTOR APPLICATIONS. TO BE DETERMINED BY THE PROJECT DESIGNER*
2. *SERIAL CONNECTION FOR RTD IS A PROJECT SPECIFIC REQUIREMENT*

GENERAL NOTES

1. DRAWN NO POWER CONDITION
2. UNLESS OTHERWISE SHOWN 240V AC CONTROL CABLING MINIMUM 0.75mm^2 Cu PVC V75 OR LSFLEX R-125
3. UNLESS OTHERWISE SHOWN 24V DC CONTROL CABLING MINIMUM 0.5mm^2 Cu PVC V75 OR LSFLEX R-125

ISSUE	DATE	GRID	REVISION	DRN	REC	APPD
B	04/2023		PROTECTION OPTIONS REVISED	PH	SW	WEB

DESIGN SURVEY NONE | VERTICAL DATUM NONE | COORDINATE SYS NONE | ASCON SURVEY NONE | DES REF | DES CALC T LIU | DES CHD E GLIWSKI | DRN P HARVEY | Q.C. CHD S MEMORY | NORTH POINT

SUBMITTED 29/11/2019 T LIU (SIGNED) SENIOR ENGINEER – ELECTRICAL

RECOMMENDED 29/11/2019 E GLIWSKI (SIGNED) PRINCIPAL ENGINEER – ELECTRICAL

APPROVED 28/11/2019 N JOHNSON (SIGNED) SNR PRINCIPAL ENGINEER – ELECT

ENGINEERING

WATER CORPORATION

ELECTRICAL STANDARD SWITCHBOARD DESIGNS
SMALL PUMP STATIONS
MOTOR STARTER REFERENCE – BORE
ATr STARTER – CONTROL DIAGRAM – RTD OPTIONS

FILE | PROJECT | PLAN MN01-24-4.4 | CAD | ISSUE B | ORIGINAL SHEET SIZE A1 | MF

566
810

© THIS DRAWING IS THE PROPERTY OF THE WATER CORPORATION. IT SHALL NOT BE COPIED WITHOUT PERMISSION.

STANDARDS\APPROVED\MN01\MN01-024-004-04B 13:58 06/04/2023 HARVEYPO/NB46193