DocuSign Envelope ID: D02654E8-1738-4B59-B551-4B2FDB7E3BF1

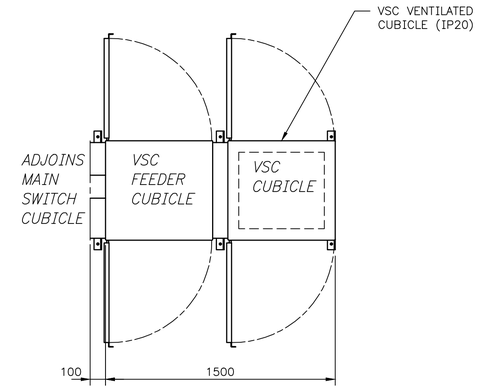

ONE ONLY VSC APPLICATIONS (≤150.5A)

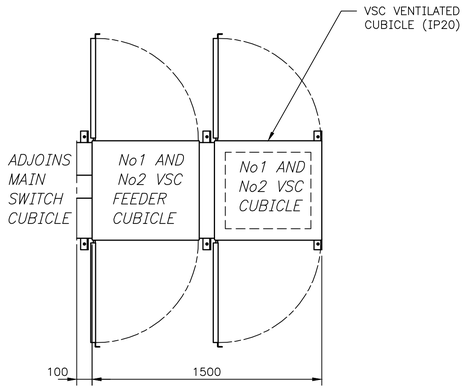

TWO ONLY VSC APPLICATIONS (≤62.1A)

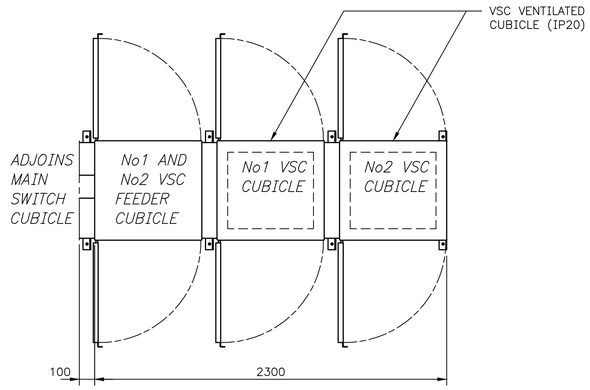

TWO ONLY VSC APPLICATIONS (>62.1A VSC ≤90.1A)

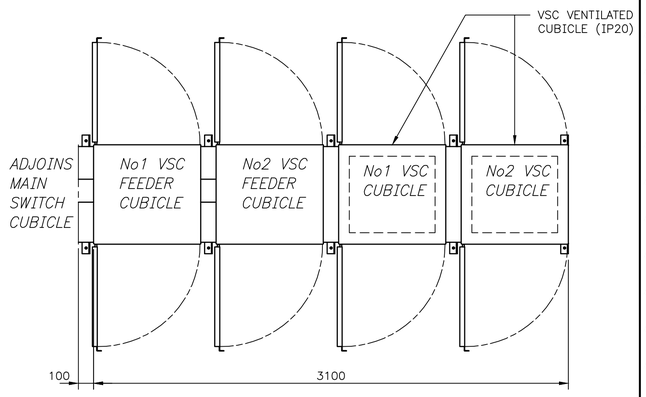

TWO ONLY VSC APPLICATIONS (>90.1A VSC ≤150.5A)

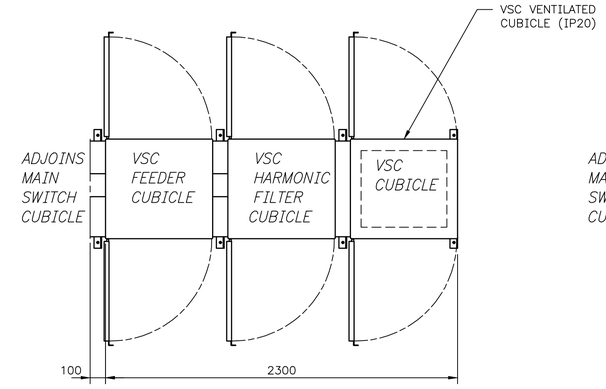

ONE VSC + HARMONIC FILTER APPLICATIONS (≤31.9A)

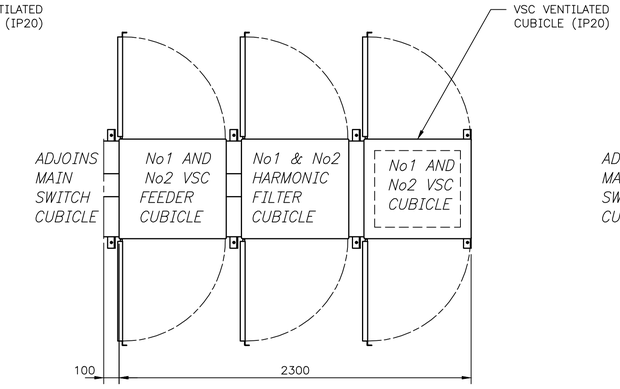

TWO VSC + HARMONIC FILTER APPLICATIONS (≤31.9A)

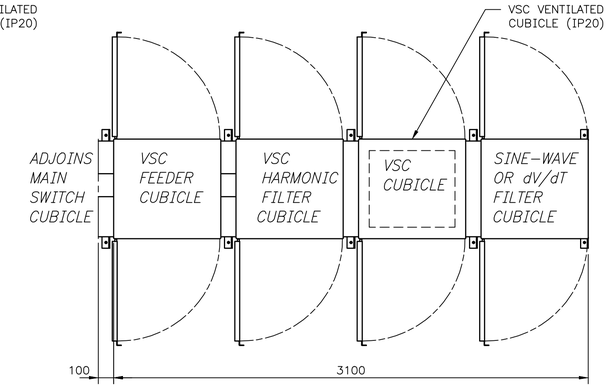

ONE VSC + HARMONIC FILTER + SINE-WAVE FILTER APPLICATIONS (≤31.9A)
OR
ONE VSC + HARMONIC FILTER + dV/dT FILTER APPLICATIONS (≤31.9A)

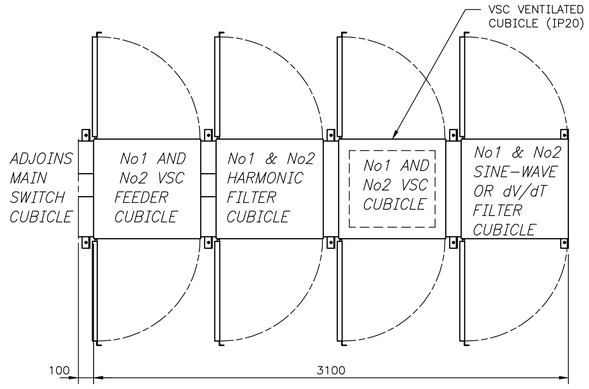

TWO VSC + HARMONIC FILTER + SINE-WAVE FILTER APPLICATIONS (≤31.9A)
OR
TWO VSC + HARMONIC FILTER + dV/dT FILTER APPLICATIONS (≤31.9A)

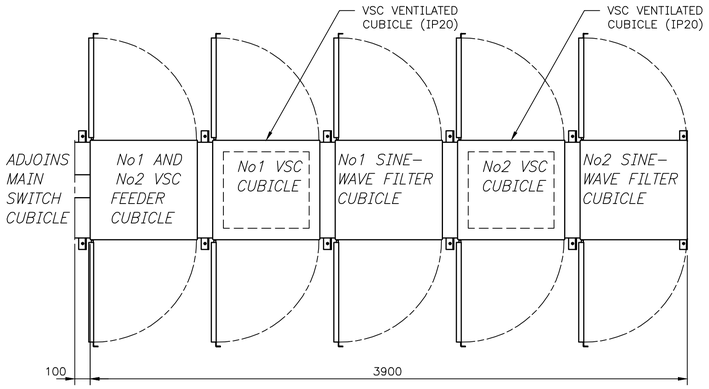

TWO VSC + SINE-WAVE FILTER APPLICATIONS (≤62.1A)

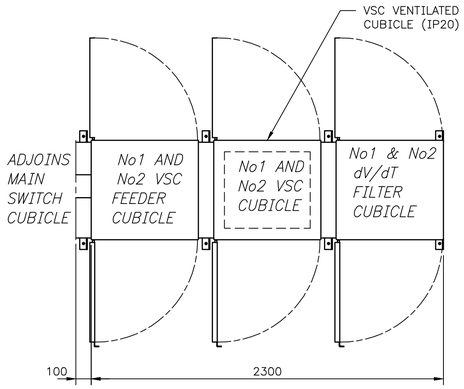

TWO VSC + dV/dT FILTER APPLICATIONS (>12.8A VSC ≤62.1A)

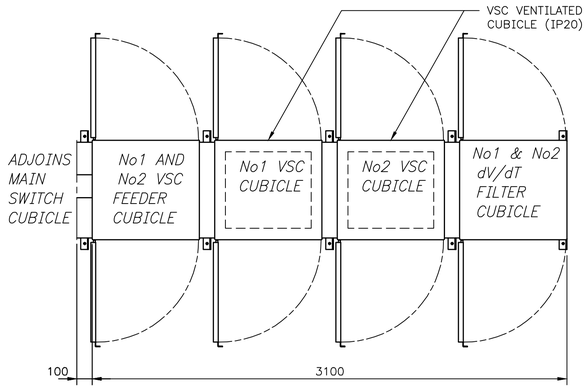

TWO VSC + dV/dT FILTER APPLICATIONS (>62.1A VSC ≤90.1A)

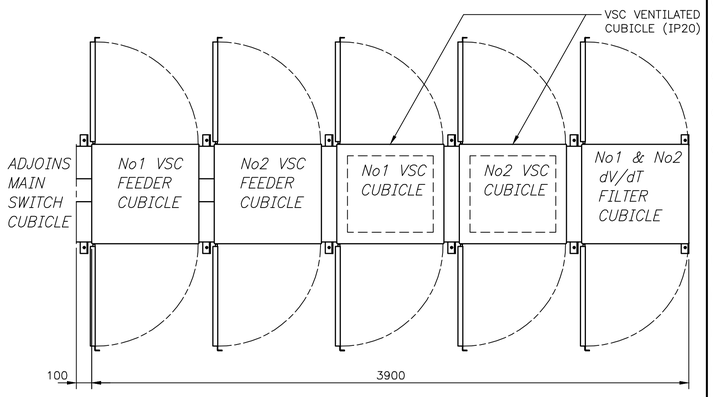

TWO VSC + dV/dT FILTER APPLICATIONS (>90.1A VSC ≤150.5A)

GENERAL NOTES
1. UNLESS OTHERWISE SHOWN ALL DIMENSIONS ARE IN MILLIMETRES

MAIN SWITCHBOARD (SINGLE SWITCHBOARD SITE) OR
PUMP STATION SWITCHBOARD (MULTIPLE SWITCHBOARD SITE)

500 0 500 1000 mm

1:20 AT SHEET SIZE A1

ISSUE	DATE	GRID	REVISION	DRN	REC	APPD

DESIGN SURVEY NONE | VERTICAL DATUM NONE | COORDINATE SYS NONE | ASCON SURVEY NONE | DES REF

DES CALC S GILMOUR | DES CHD T LIU | DRN SA MEMORY | Q.C. CHD P HARVEY

NORTH POINT

SUBMITTED 16/06/2023 SA MEMORY (SIGNED) SENIOR TECHNICAL ADVISOR – ELECT

RECOMMENDED 16/06/2023 S GILMOUR (SIGNED) SENIOR ENGINEER – ELECTRICAL

APPROVED 16/06/2023 T LIU (SIGNED) PRINCIPAL ENGINEER – ELECTRICAL

ENGINEERING

WATER CORPORATION

ELECTRICAL STANDARD SWITCHBOARD DESIGNS
SMALL PUMP STATIONS
SWITCHBOARD REFERENCE
MK8 OUTDOOR SWITCHBOARD – VSC CUBICLE – SWITCHBOARD SIZING

FILE | PROJECT | PLAN MN01-21-5.2 | CAD | ISSUE A | ORIGINAL SHEET SIZE A1 | MF

© THIS DRAWING IS THE PROPERTY OF THE WATER CORPORATION. IT SHALL NOT BE COPIED WITHOUT PERMISSION.

STANDARDS\APPROVED\MN01\MN01-021-005-02A 10:42 16/06/2023 MEMORYSO/NB46194

566
810