DocuSign Envelope ID: 17801A6B-2A60-4CFC-B2C3-1ECB6A53F576

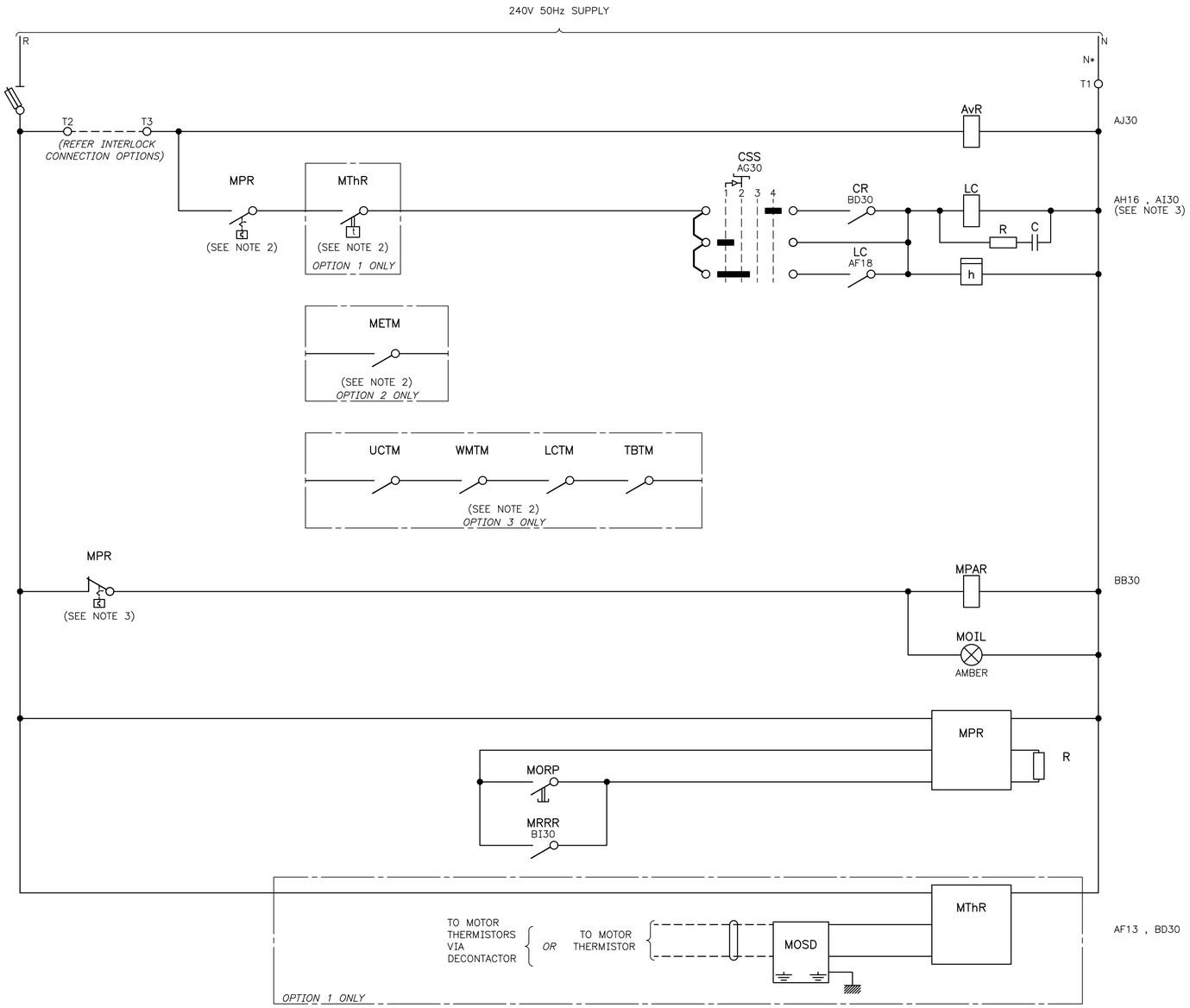

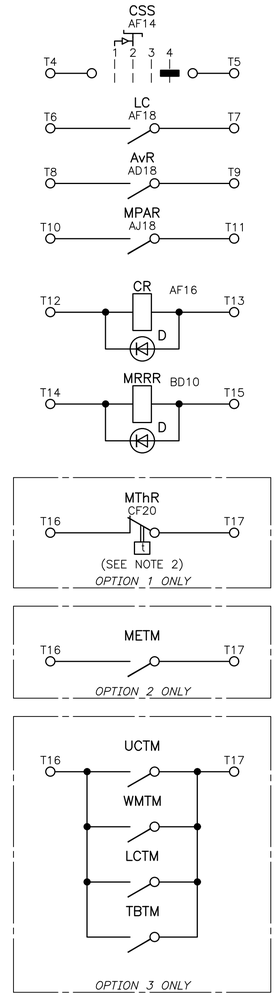

CONTROL INTERCONNECTIONS

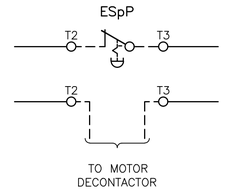

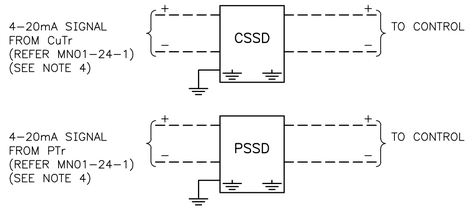

CONTROL INTERCONNECTIONS

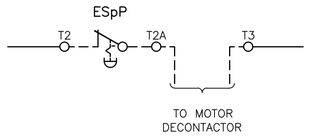

INTERLOCK CONNECTION OPTIONS

SELECTION DEPENDENT ON APPLICATION

REFERENCE EXPLANATION

(P)WXYZ
41#1.1#AB34

- PANEL LETTER
- CODE
- HORIZONTAL LOCATION
- VERTICAL LOCATION
- PART Nº (IF REQUIRED)
- SHEET Nº
- BUNDLE Nº

CONTROL SELECTOR SWITCH

POSITION	FUNCTION
1	LOCAL START
2	LOCAL RUN
3	OFF
4	NORMAL

CODE SCHEDULE

AvR	AVAILABLE RELAY
C	CAPACITOR
CF	CONTROL FUSE
CR	CONTROL RELAY
CSS	CONTROL SELECTOR SWITCH
D	DIODE
ESpP	EMERGENCY STOP PUSHBUTTON
h	HOUR METER
LC	LINE CONTACTOR
LCTM	LOWER CROWN OF WINDING TEMPERATURE MONITOR
METM	MOTOR ENCLOSURE TEMPERATURE MONITOR
MOIL	MOTOR OVERLOAD FAULT INDICATING LIGHT
MORP	MOTOR OVERLOAD FAULT RESET PUSHBUTTON
MOSD	MOTOR OVERTEMPERATURE SURGE DIVERTER
MPAR	MOTOR PROTECTION AUXILIARY RELAY
MPR	MOTOR PROTECTION RELAY
MPRR	MOTOR PROTECTION RELAY RESET
MRRR	MOTOR PROTECTION REMOTE RESET RELAY
MThR	MOTOR THERMISTOR RELAY
R	RESISTOR
TBTM	THRUST BEARING TEMPERATURE MONITOR
UCTM	UPPER CROWN OF WINDING TEMPERATURE MONITOR
WMTM	WINDING MOTOR FRAME TEMPERATURE MONITOR

OPTION TABLE

No	DESCRIPTION
1	MOTOR WITH THERMISTORS
2	MOTOR WITH 1 RESISTANCE TEMPERATURE DETECTOR *(SEE INSTRUCTIONS FOR USE NOTE 2)*
3	MOTOR WITH 4 RESISTANCE TEMPERATURE DETECTORS *(SEE INSTRUCTIONS FOR USE NOTE 2)*

GENERAL NOTES

1. DRAWN NO POWER CONDITION
2. MOTOR THERMISTOR RELAY AND RTD RELAY CONTACTS CHANGE STATE ON ENERGIZATION
3. FOR CONTACTOR MAIN POLES AND MPR COIL REFER TO MN01–24–1
4. POWER AND CURRENT SIGNAL SURGE DIVERTERS MAY BE OMITTED WHERE SWITCHBOARD AND CONTROL CUBICLE ARE MOUNTED ON THE SAME CONCRETE SLAB OR WHERE POWER SYSTEM INTERFACE IS USED

INSTRUCTIONS FOR USE

1. *IF THE RTD SENSOR LOCATED WITHIN THE MOTOR ENCLOSURE IS IN A SPECIFIC LOCATION AND ITS LOCATION IS REQUIRED TO BE IDENTIFIED FOR PROJECT PURPOSES. THE METM AND MESD CODES AND DESCRIPTIONS CAN BE RENAMED INLINE WITH CODES AND DESCRIPTIONS ASSIGNED FOR FOUR RTD MOTOR APPLICATIONS. TO BE DETERMINED BY THE PROJECT DESIGNER*
2. *FOR RTD CONNECTION DETAILS REFER TO MN01–24–4.4*

ISSUE	DATE	GRID	REVISION	DRN	REC	APPD
E	04/2023		PROTECTION OPTIONS REVISED	PH	TL	EG
D	01/2022		MThR CONTACT ADDED TO PRIMARY PROTECTION	PH	TL	EG
C	03/2021		AvR CONTROL WIRING REVISED	PH	TL	EG
B	10/2020		AvR CONTROL WIRING REVISED	PH	EG	NJ

DESIGN SURVEY NONE | VERTICAL DATUM NONE | COORDINATE SYS NONE | ASCON SURVEY NONE | DES REF | DES CALC T LIU | DES CHD E GLIWSKI | DRN P HARVEY | Q.C. CHD S MEMORY | NORTH POINT

SUBMITTED 26/02/2019 T LIU (SIGNED) SENIOR ENGINEER – ELECTRICAL

RECOMMENDED 26/02/2019 E GLIWSKI (SIGNED) PRINCIPAL ENGINEER – ELECTRICAL

APPROVED 26/02/2019 N JOHNSON (SIGNED) SNR PRINCIPAL ENGINEER – ELECT

ENGINEERING

WATER CORPORATION

ELECTRICAL STANDARD SWITCHBOARD DESIGNS
SMALL PUMP STATIONS
MOTOR STARTER REFERENCE – BORE
DOL STARTER – CONTROL DIAGRAM 45.1A – 100A

FILE | PLAN | CAD | ISSUE E | ORIGINAL SHEET SIZE A1
PROJECT | MN01–24–2.2 | MF

566
810

© THIS DRAWING IS THE PROPERTY OF THE WATER CORPORATION. IT SHALL NOT BE COPIED WITHOUT PERMISSION.

STANDARDS\APPROVED\MN01\MN01–024–002–02E 13:58 06/04/2023 HARVEYP0/NB46193