DocuSign Envelope ID: 57049E66-4DF5-44E1-9F9A-7DAB6BC0F4A3

DETERMINATION OF SWITCHBOARD DIMENSIONS

SINGLE SWITCHBOARD SITE AS SHOWN ON MN01–1–1

MAIN SWITCHBOARD
1. DETERMINE NUMBER OF CUBICLES REQUIRED FOR INCOMER RATING AND STANDBY SUPPLY REQUIREMENTS – REFER TABLE 2 ON MN01–21–1.3
2. ADD NUMBER OF CUBICLES REQUIRED TO ACCOMMODATE MOTOR STARTERS – REFER TABLES 4,5,6,7
   A CUBICLE CAN ACCOMMODATE MULTIPLE PANELS TO A HEIGHT OF 1725mm

EXAMPLE – WASTEWATER PUMP STATION
100A INCOMER WITH MANUAL TRANSFER TO STANDBY SUPPLY (REFER TABLE 2, ITEM 2, COLUMN 4)
2 AUTOTRANSFORMER STARTERS, MOTOR FLC 18A – COMBINED ASSEMBLY PANEL HEIGHT 1194 (REFER TABLE 6, ITEM 1, COLUMN 7)
1 DIRECT ON LINE STARTER, MOTOR FLC 4A – PANEL HEIGHT 448 (REFER TABLE 5, ITEM 1, COLUMN 4)
TOTAL STARTER PANEL HEIGHT 1194 + 448 = 1642 WHICH IS < 1725 1 CUBICLE REQUIRED
1 CUBICLE FOR INCOMER + 1 CUBICLE FOR STARTERS = 2 CUBICLES, 1500 LONG (REFER TABLE 1, ITEM 2, COLUMN 3)

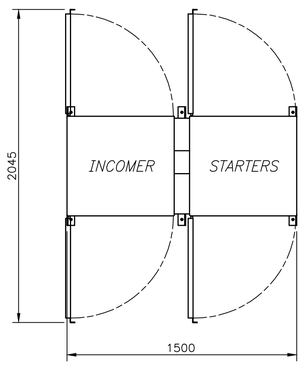

MAIN SWITCHBOARD
(NOT TO SCALE)

MAIN SWITCHBOARD
1. DETERMINE NUMBER OF CUBICLES REQUIRED FOR INCOMER RATING AND STANDBY SUPPLY REQUIREMENTS – REFER TABLE 2
2. ADD NUMBER OF CUBICLES REQUIRED TO ACCOMMODATE VARIABLE SPEED CONTROLLERS AND OPTIONAL FILTERS – REFER TABLES 9,10,11,12,13
   A CUBICLE CAN ACCOMMODATE MULTIPLE PANELS TO A HEIGHT OF 1725mm

EXAMPLE – WATER PUMP STATION UTILISING VARIABLE SPEED CONTROLLERS
100A INCOMER WITH AUTO TRANSFER TO STANDBY SUPPLY – 1 INCOMER CUBICLE REQUIRED (REFER TABLE 2, ITEM 3, COLUMN 4)
2 VARIABLE SPEED CONTROLLERS, MOTOR FLC 28A – 1 FEEDER CUBICLE REQUIRED (REFER TABLE 9, ITEM 5, COLUMN 5)
2 HARMONIC FILTERS, MOTOR FLC 28A AND 10% TDHi– 1 HARMONIC FILTER CUBICLE REQUIRED (REFER TABLE 10, ITEM 5, COLUMN 13)
2 SINE–WAVE FILTERS, MOTOR FLC 28A – 1 SINE–WAVE FILTER CUBICLE REQUIRED (REFER TABLE 12, ITEM 2, COLUMN 5)
1 CUBICLE FOR INCOMER + 1 CUBICLE FOR HARMONIC FILTERS + 1 CUBICLE FOR VSC'S + 1 CUBICLE FOR SINE–WAVE FILTERS =
5 CUBICLES, 3900 LONG (REFER TABLE 1, ITEM 5, COLUMN 3)

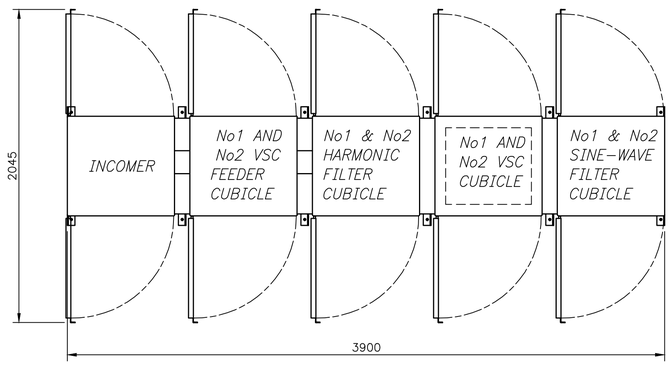

MAIN SWITCHBOARD
(NOT TO SCALE)

MULTIPLE SWITCHBOARD SITE AS SHOWN ON MN01–1–2, MN01–1–3

MAIN SWITCHBOARD
1. DETERMINE NUMBER OF CUBICLES REQUIRED FOR INCOMER RATING AND STANDBY SUPPLY REQUIREMENTS – REFER TABLE 2

EXAMPLE – WATER PUMP STATION
220A INCOMER WITH NO STANDBY SUPPLY – 3 CUBICLE ASSEMBLY (REFER TABLE 2, ITEM 4, COLUMN 4)
3 CUBICLES FOR MAIN SWITCHBOARD, 2300 LONG (REFER TABLE 1, ITEM 3, COLUMN 3)

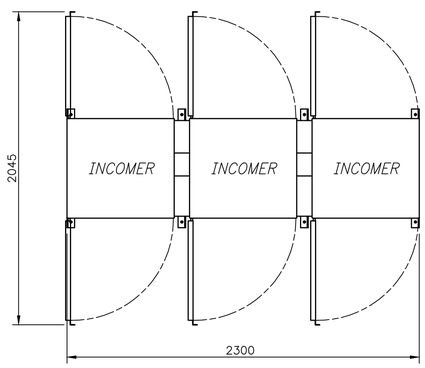

MAIN SWITCHBOARD
(NOT TO SCALE)

PUMP STATION SWITCHBOARD
1. DETERMINE NUMBER OF CUBICLES REQUIRED FOR INCOMER RATING AND STANDBY SUPPLY REQUIREMENTS – REFER TABLE 3
2. ADD NUMBER OF CUBICLES REQUIRED TO ACCOMMODATE MOTOR STARTERS – REFER TABLES 4,5,6,7
   A CUBICLE CAN ACCOMMODATE MULTIPLE PANELS TO A HEIGHT OF 1725mm

EXAMPLE – WATER PUMP STATION
220A INCOMER WITH AUTO TRANSFER TO STANDBY SUPPLY – 2 CUBICLE ASSEMBLY (REFER TABLE 3, ITEM 6, COLUMN 4)
2 AUTOTRANSFORMER STARTERS, MOTOR FLC 135A – 2 CUBICLES REQUIRED (REFER TABLE 4, ITEM 14, COLUMN 13)
2 CUBICLES FOR INCOMER + 2 CUBICLES FOR STARTERS = 4 CUBICLES, 3100 LONG (REFER TABLE 1, ITEM 4, COLUMN 3)

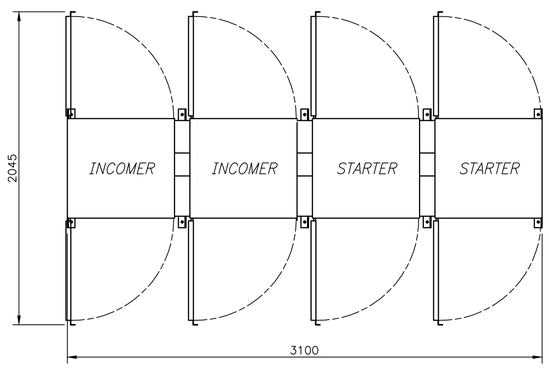

PUMP STATION SWITCHBOARD
(NOT TO SCALE)

GENERAL NOTES
1. UNLESS OTHERWISE SHOWN ALL DIMENSIONS ARE IN MILLIMETRES

500 0 500 1000 mm
1:20 AT SHEET SIZE A1

ISSUE	DATE	GRID	REVISION	DRN	REC	APPD
E	06/2023		WATER PUMP STATION UTILISING VARIABLE SPEED CONTROLLERS EXAMPLE ADDED	SAM	SG	TK
D	10/2022		INTERCONNECTING DUCT LOCATION REPOSITIONED	SAM	SWG	EG
C	03/2021		SWITCHBOARD DOORS AND DOOR ARRANGMENTS REVISED	PH	TL	EG
B	11/2019		MULTIPLE SWITCHBOARD SITE EXAMPLE REVISED	PH	EG	NJ

DESIGN SURVEY NONE | VERTICAL DATUM NONE | COORDINATE SYS NONE | ASCON SURVEY NONE | DES REF | DES CALC E FONG | DES CHD K O'GRADY | DRN P HARVEY | Q.C. CHD S MEMORY | NORTH POINT

SUBMITTED 24/07/2017 E FONG (SIGNED) SENIOR ENGINEER – ELECTRICAL
RECOMMENDED 24/07/2017 K O'GRADY (SIGNED) PRINCIPAL ENGINEER – ELECTRICAL
APPROVED 24/07/2017 N JOHNSON (SIGNED) SNR PRINCIPAL ENGINEER – ELECT

ENGINEERING

WATER CORPORATION

ELECTRICAL STANDARD SWITCHBOARD DESIGNS
SMALL PUMP STATIONS
SWITCHBOARD REFERENCE
MK8 OUTDOOR CUBICLE – SWITCHBOARD SIZING EXAMPLES

FILE | PLAN | CAD | ISSUE
PROJECT | MN01–21–1.2 | E | MF

ORIGINAL SHEET SIZE A1

566
810

© THIS DRAWING IS THE PROPERTY OF THE WATER CORPORATION. IT SHALL NOT BE COPIED WITHOUT PERMISSION.

STANDARDS\APPROVED\MN01\MN01–021–001–02E 10:53 16/06/2023 MEMORYS0/NB46194