DocuSign Envelope ID: 24381753-08F0-4DCD-B103-7A44A7082BFA

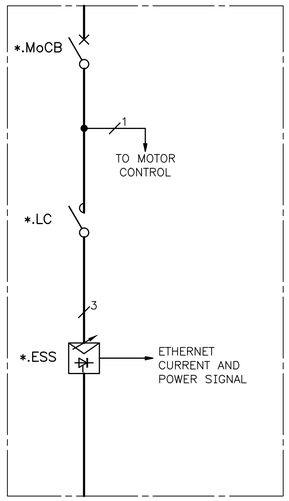

ESS 5.4A – 100A
(SEE DESIGN NOTE 1)

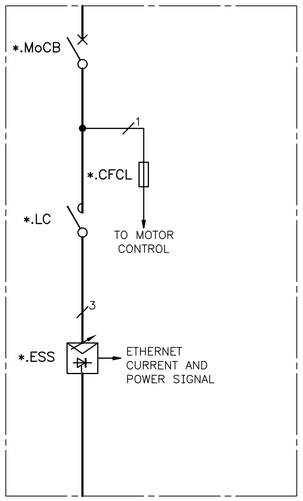

ESS 100.1A – 200A
(SEE DESIGN NOTE 1)

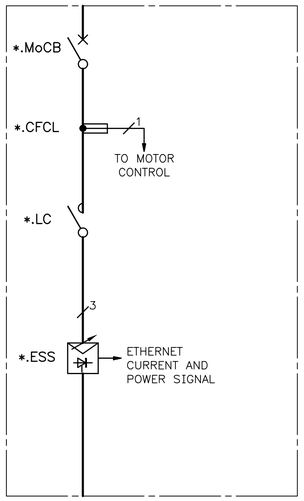

ESS 200.1A – 263A
(SEE DESIGN NOTE 1)

POWER EQUIPMENT SCHEDULE

CODE	MOTOR FULL LOAD CURRENT	SPECIFICATION
MoCB	5.4A – 21A	SCHNEIDER ELECTRIC, COMPACT NSX100B, : 100A WITH MICROLOGIC 2.2, 40A TRIP UNIT
	21.1A – 89A	SCHNEIDER ELECTRIC, COMPACT NSX100B, : 100A WITH MICROLOGIC 2.2, 100A TRIP UNIT
	89.1A – 100A	SCHNEIDER ELECTRIC, COMPACT NSX160B, : 160A WITH MICROLOGIC 2.2, 160A TRIP UNIT
	100.1A – 135A	SCHNEIDER ELECTRIC, COMPACT NSX160B, : 160A, WITH MICROLOGIC 2.2, 160A TRIP UNIT
	135.1A – 200A	SCHNEIDER ELECTRIC, COMPACT NSX250B, : 250A, WITH MICROLOGIC 2.2, 250A TRIP UNIT
	200.1A – 263A	SCHNEIDER ELECTRIC, COMPACT NSX400F, : 400A, WITH MICROLOGIC 2.3, 400A TRIP UNIT
ESS	ALL	DANFOSS MCD600
MPR	5.4A – 263A	DANFOSS MCD600 INCORPORATES MOTOR PROTECTION

CODE SCHEDULE

CFCL	CONTROL FAULT CURRENT LIMITER
ESS	ELECTRONIC SOFT STARTER
LC	LINE CONTACTOR
MoCB	MOTOR CIRCUIT BREAKER

DESIGN NOTES

1. BYPASS CONTACTOR INTEGRAL TO ELECTRONIC SOFT STARTER FOR 5.4A – 263A

DESIGN CRITERIA

ELECTRONIC SOFT STARTER SELECTION IS BASED ON THE FOLLOWING CRITERIA

1. START CURRENT ASSUMED 350% x MOTOR FLC

2. DUTY CYCLE OF 5 x 15 SECOND STARTS AND 5 x 15 SECOND STOPS PER HOUR

ISSUE	DATE	GRID	REVISION	DRN	REC	APPD
G	01/2024		COMMUNICATIONS PROTOCOL AND CFCL SYMBOL REVISED	SAM	TK	EG
F	03/2021		ESS ARRANGEMENTS AND EQUIPMENT SCHEDULE REVISED	PH	TL	EG
E	10/2020		SEMI CONDUCTOR PROTECTION FUSES DELETED; MoCB REVISED	PH	EG	NJ
D	02/2020		200.1A – 263A BREAKER SPECIFICATION REVISED	PH	TL	EG
C	11/2019		GREATER THAN 100A STARTERS AND DESIGN CRITERIA REVISED	PH	EG	NJ
B	02/2019		MPR AND MoCB SPECIFICATION AND PFCL AND PTPF REVISED	PH	EG	NJ

566
810

DESIGN SURVEY NONE | VERTICAL DATUM NONE | COORDINATE SYS NONE | ASCON SURVEY NONE | DES REF

DES CALC E FONG | DES CHD K O'GRADY | DRN P HARVEY | Q.C. CHD S MEMORY

NORTH POINT

SUBMITTED 24/07/2017 E FONG (SIGNED) SENIOR ENGINEER – ELECTRICAL

RECOMMENDED 24/07/2017 K O'GRADY (SIGNED) PRINCIPAL ENGINEER – ELECTRICAL

APPROVED 24/07/2017 N JOHNSON (SIGNED) SNR PRINCIPAL ENGINEER – ELECT

ENGINEERING

WATER CORPORATION

ELECTRICAL STANDARD SWITCHBOARD DESIGNS
SMALL PUMP STATIONS
PRIMARY DESIGN – POWER DIAGRAM TEMPLATE OPTIONS
MOTOR STARTERS – WASTEWATER – PART 2

FILE | PROJECT | PLAN MN01–12–1.2 | CAD | ISSUE G | ORIGINAL SHEET SIZE A1 | MF

© THIS DRAWING IS THE PROPERTY OF THE WATER CORPORATION. IT SHALL NOT BE COPIED WITHOUT PERMISSION.

STANDARDS\APPROVED\MN01\PREAPPROVAL\MN01–012–001–02G 17:18 12/01/2024 MEMORYSO/NB46194