DocuSign Envelope ID: 17801A6B-2A60-4CFC-B2C3-1ECB6A53F576

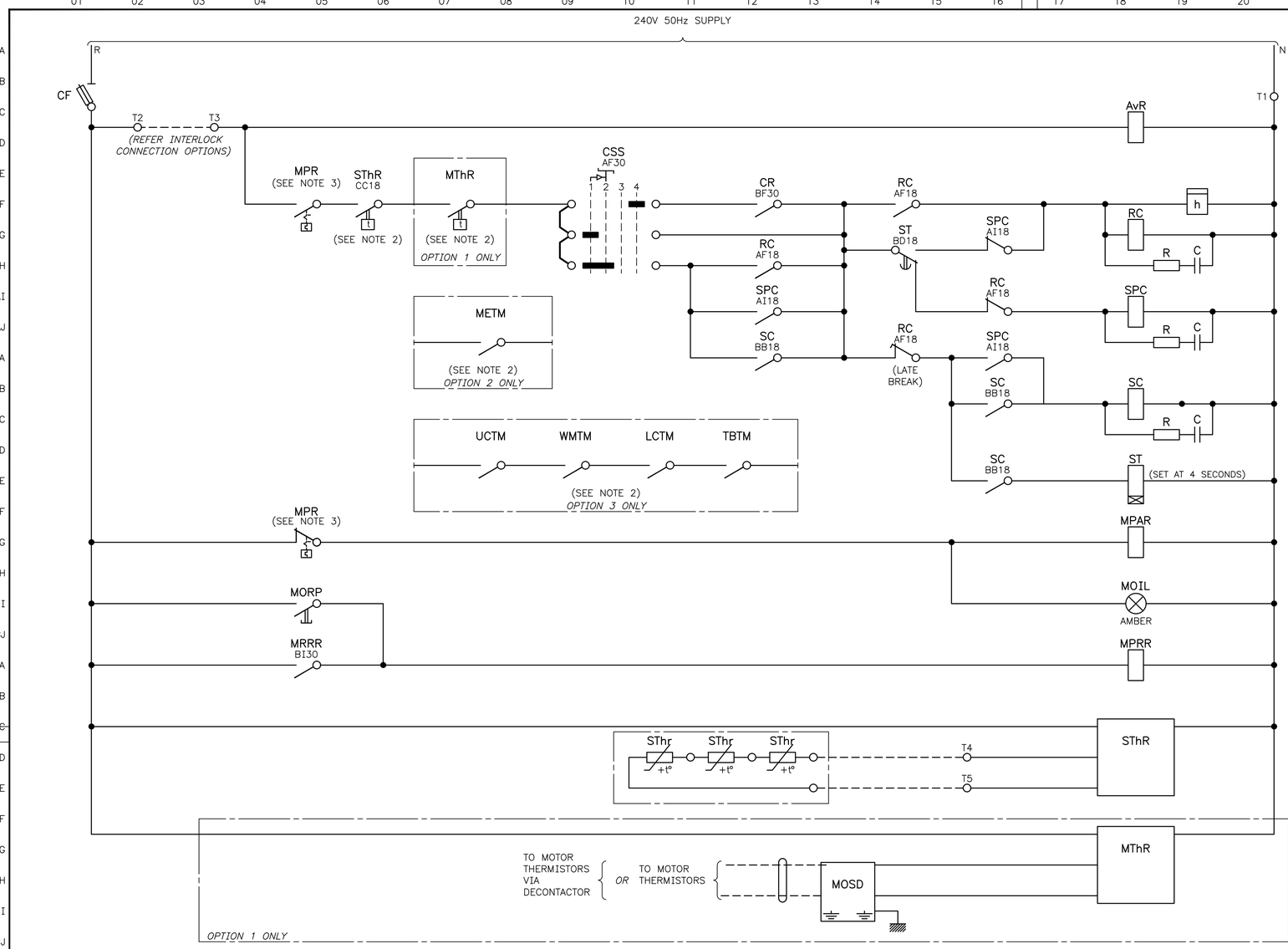

CODE SCHEDULE

AvR	AVAILABLE RELAY
C	CAPACITOR
CF	CONTROL FUSE
CR	CONTROL RELAY
CSS	CONTROL SELECTOR SWITCH
CSSD	CURRENT SIGNAL SURGE DIVERTER
D	DIODE
ESpP	EMERGENCY STOP PUSHBUTTON
h	HOUR METER
LCTM	LOWER CROWN OF WINDING TEMPERATURE MONITOR
METM	MOTOR ENCLOSURE TEMPERATURE MONITOR
MOIL	MOTOR OVERLOAD FAULT INDICATING LIGHT
MORP	MOTOR OVERLOAD FAULT RESET PUSHBUTTON
MOSD	MOTOR OVERTEMPERATURE SURGE DIVERTER
MPAR	MOTOR PROTECTION AUXILIARY RELAY
MPR	MOTOR PROTECTION RELAY
MPRR	MOTOR PROTECTION RELAY RESET
MRRR	MOTOR PROTECTION REMOTE RESET RELAY
MThR	MOTOR THERMISTOR RELAY
PSSD	POWER SIGNAL SURGE DIVERTER
R	RESISTOR
RC	RUN CONTACTOR
SC	START CONTACTOR
SPC	STAR POINT CONTACTOR
ST	START TIMER
SThR	STARTER THERMISTOR RELAY
SThr	STARTER THERMISTOR
TBTM	THRUST BEARING TEMPERATURE MONITOR
UCTM	UPPER CROWN OF WINDING TEMPERATURE MONITOR
WMTM	WINDING MOTOR FRAME TEMPERATURE MONITOR

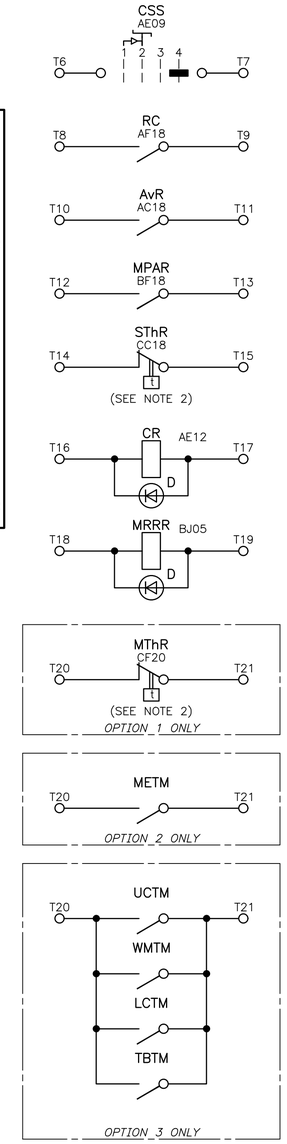

REFERENCE EXPLANATION

(P)WXYZ
41#1.1#AB34

- PANEL LETTER
- CODE
- HORIZONTAL LOCATION
- VERTICAL LOCATION
- PART Nº (IF REQUIRED)
- SHEET Nº
- BUNDLE Nº

OPTION TABLE

No	DESCRIPTION
1	MOTOR WITH THERMISTORS *(SEE INSTRUCTIONS FOR USE NOTE 2)*
2	MOTOR WITH 1 RESISTANCE TEMPERATURE DETECTOR *(SEE INSTRUCTIONS FOR USE NOTES 2 AND 3)*
3	MOTOR WITH 4 RESISTANCE TEMPERATURE DETECTORS *(SEE INSTRUCTIONS FOR USE NOTES 2 AND 3)*

CONTROL SELECTOR SWITCH

POSITION	FUNCTION
1	LOCAL START
2	LOCAL RUN
3	OFF
4	NORMAL

GENERAL NOTES

1. DRAWN NO POWER CONDITION
2. MOTOR THERMISTOR RELAY, STARTER THERMISTOR RELAY AND RTD RELAY CONTACTS CHANGE STATE ON ENERGIZATION
3. FOR CONTACTOR MAIN POLES AND MPR COIL REFER TO MN01–24–3
4. POWER AND CURRENT SIGNAL SURGE DIVERTERS MAY BE OMITTED WHERE SWITCHBOARD AND CONTROL CUBICLE ARE MOUNTED ON THE SAME CONCRETE SLAB OR WHERE POWER SYSTEM INTERFACE IS USED

INSTRUCTIONS FOR USE

1. *IF THE RTD SENSOR LOCATED WITHIN THE MOTOR ENCLOSURE IS IN A SPECIFIC LOCATION AND ITS LOCATION IS REQUIRED TO BE IDENTIFIED FOR PROJECT PURPOSES. THE METM AND MESD CODES AND DESCRIPTIONS CAN BE RENAMED INLINE WITH CODES AND DESCRIPTIONS ASSIGNED FOR FOUR RTD MOTOR APPLICATIONS. TO BE DETERMINED BY THE PROJECT DESIGNER*
2. *ADDITIONAL PROTECTION BY THERMISTORS OR RTD'S OPTIONAL FOR MOTORS UP TO AND INCLUDING 21A*
3. *FOR RTD CONNECTION DETAILS REFER TO MN01–24–4.4*

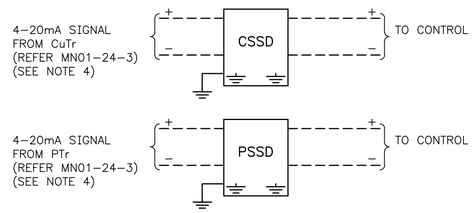

CONTROL INTERCONNECTIONS

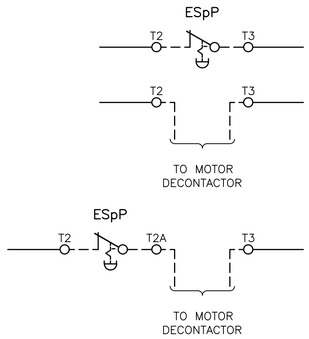

INTERLOCK CONNECTION OPTIONS

SELECTION DEPENDENT ON APPLICATION

ISSUE	DATE	GRID	REVISION	DRN	REC	APPD
G	04/2023		PROTECTION OPTIONS REVISED	PH	SW	WEG
F	01/2022		SThR CONTACT ADDED TO PRIMARY PROTECTION	PH	AL	EG
E	03/2021		AvR CONTROL WIRING REVISED	PH	TL	EG
D	10/2020		AvR CONTROL WIRING REVISED	PH	EG	NJ
C	02/2019		CONTROL FUSE, MPR AND 4TH LINE TITLE AND NOTE 4 REVISED; RPS, MOSD AND MThR DELETED	PH	EG	NJ
B	05/2018		INTERLOCK CONNECTION OPTIONS REVISED	PH	EF	KOG

566
810

DESIGN SURVEY NONE | VERTICAL DATUM NONE | COORDINATE SYS NONE | ASCON SURVEY NONE | DES REF

DES CALC E FONG | DES CHD K O'GRADY | DRN P HARVEY | Q.C. CHD S MEMORY

NORTH POINT

SUBMITTED 24/07/2017 E FONG (SIGNED) SENIOR ENGINEER – ELECTRICAL

RECOMMENDED 24/07/2017 K O'GRADY (SIGNED) PRINCIPAL ENGINEER – ELECTRICAL

APPROVED 24/07/2017 N JOHNSON (SIGNED) SNR PRINCIPAL ENGINEER – ELECT

ENGINEERING

WATER CORPORATION

ELECTRICAL STANDARD SWITCHBOARD DESIGNS
SMALL PUMP STATIONS
MOTOR STARTER REFERENCE – BORE
ATr STARTER – CONTROL DIAGRAM 4.1A – 45A

FILE | PLAN | CAD | ISSUE
PROJECT | MN01–24–4.1 | G

ORIGINAL SHEET SIZE A1

MF

© THIS DRAWING IS THE PROPERTY OF THE WATER CORPORATION. IT SHALL NOT BE COPIED WITHOUT PERMISSION.

STANDARDS\APPROVED\MN01\MN01–024–004–01G 13:58 06/04/2023 HARVEYPO/NB46193