DocuSign Envelope ID: 24381753-08F0-4DCD-B103-7A44A7082BFA

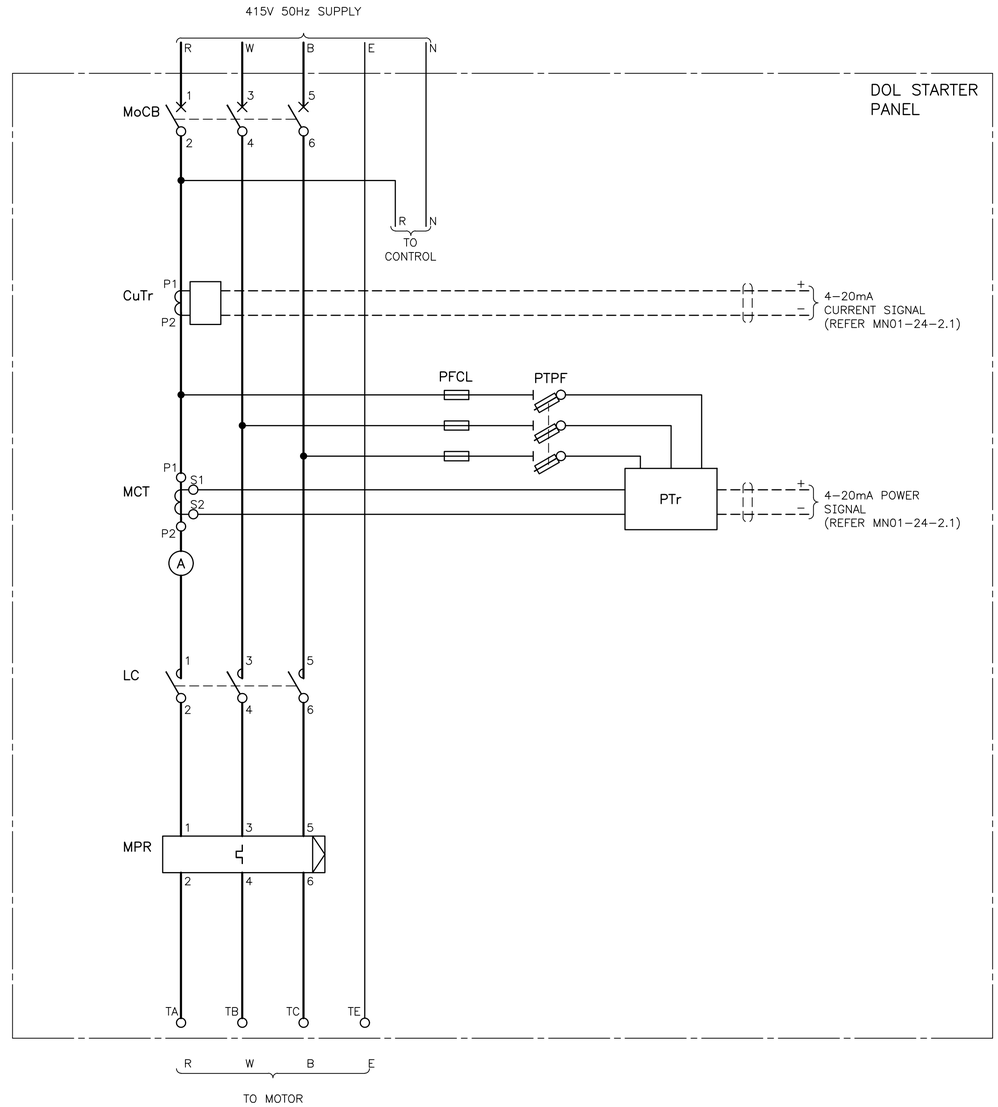

0.2A – 21A

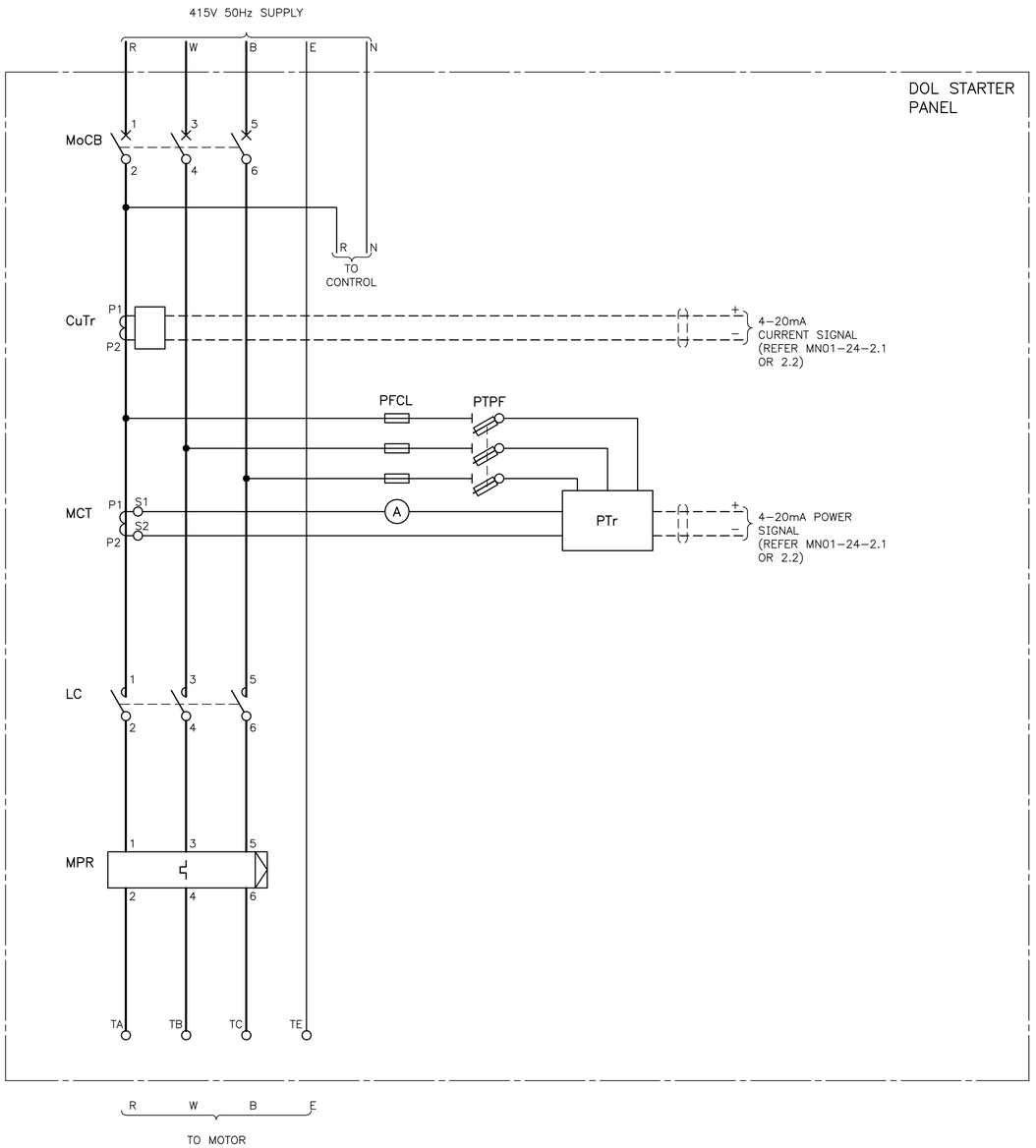

21.1A – 100A

CODE SCHEDULE

A	AMMETER
CuTr	CURRENT TRANSFORMER AND TRANSDUCER
LC	LINE CONTACTOR
MCT	METERING CURRENT TRANSFORMER
MoCB	MOTOR CIRCUIT BREAKER
MPR	MOTOR PROTECTION RELAY
PFCL	POWER TRANSDUCER FAULT CURRENT LIMITER
PTPF	POWER TRANSDUCER POTENTIAL FUSE
PTr	POWER TRANSDUCER

ISSUE	DATE	GRID	REVISION	DRN	REC	APPD
C	01/2024		PFCL SYMBOL REVISED	SAM	TK	EG
B	02/2019		PFCL AND PTPF REVISED; MoFC AND MoSD DELETED	PH	EG	NJ

DESIGN SURVEY NONE | VERTICAL DATUM NONE | COORDINATE SYS NONE | ASCON SURVEY NONE | DES REF | DES CALC E FONG | DES CHD K O'GRADY | DRN P HARVEY | Q.C. CHD S MEMORY | NORTH POINT

SUBMITTED 24/07/2017 E FONG (SIGNED) SENIOR ENGINEER – ELECTRICAL

RECOMMENDED 24/07/2017 K O'GRADY (SIGNED) PRINCIPAL ENGINEER – ELECTRICAL

APPROVED 24/07/2017 N JOHNSON (SIGNED) SNR PRINCIPAL ENGINEER – ELECT

ENGINEERING

WATER CORPORATION

ELECTRICAL STANDARD SWITCHBOARD DESIGNS
SMALL PUMP STATIONS
MOTOR STARTER REFERENCE – BORE
DOL STARTER – POWER DIAGRAM 0.2A – 100A

FILE | PROJECT | PLAN MN01–24–1 | CAD | ISSUE C | ORIGINAL SHEET SIZE A1 | MF

566
810

© THIS DRAWING IS THE PROPERTY OF THE WATER CORPORATION. IT SHALL NOT BE COPIED WITHOUT PERMISSION.

STANDARDS\APPROVED\MN01\PREAPPROVAL\MN01–024–001–01C 17:19 12/01/2024 MEMORYSO/NB46194