DocuSign Envelope ID: 24381753-08F0-4DCD-B103-7A44A7082BFA

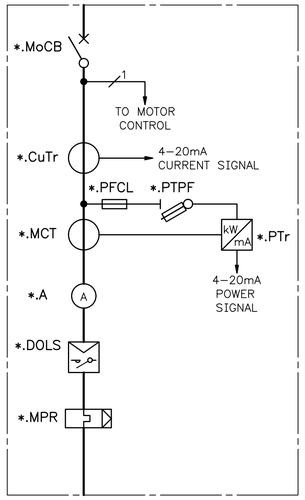

DOL STARTER 0.2A – 21A

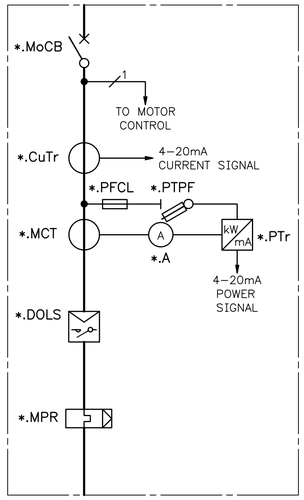

DOL STARTER 21.1A – 100A

POWER EQUIPMENT SCHEDULE		
CODE	MOTOR FULL LOAD CURRENT	SPECIFICATION
MoCB	0.2A – 21A	SCHNEIDER ELECTRIC, COMPACT NSX100B, : 100A COMPLETE WITH MICROLOGIC 2.2, 40A TRIP UNIT
	21.1A – 89A	SCHNEIDER ELECTRIC, COMPACT NSX100B, : 100A COMPLETE WITH MICROLOGIC 2.2, 100A TRIP UNIT
	89.1A – 100A	SCHNEIDER ELECTRIC, COMPACT NSX160B, : 160A COMPLETE WITH MICROLOGIC 2.2, 160A TRIP UNIT
	100.1A – 200A	SCHNEIDER ELECTRIC, COMPACT NSX250B, : 250A COMPLETE WITH MICROLOGIC 6.2 E–M, 220A TRIP UNIT
	200.1A – 263A	SCHNEIDER ELECTRIC, COMPACT NSX400F, : 400A COMPLETE WITH MICROLOGIC 6.3 E–M, 320A TRIP UNIT
MPR	0.2A – 45A	SPRECHER + SCHUH, CEP7
	45.1A – 100A	NHP, NEF
	100.1A – 263A	MICROLOGIC 6.* E–M INCORPORATES MOTOR PROTECTION

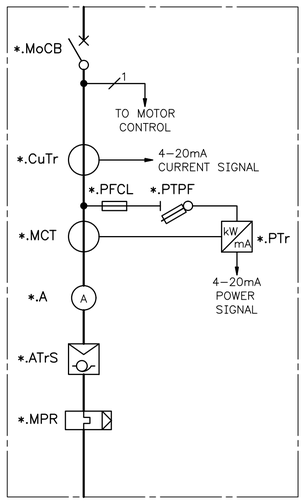

ATr STARTER 4.1A – 21A

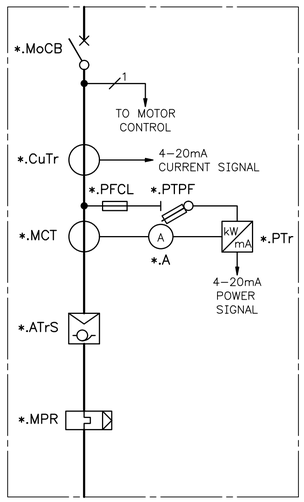

ATr STARTER 21.1A – 100A

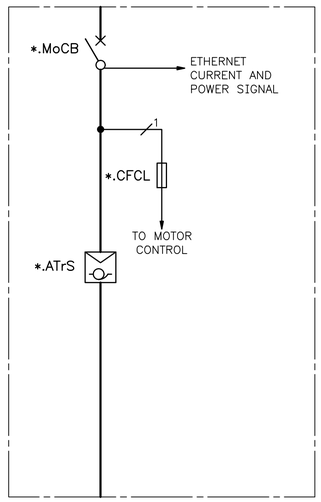

ATr STARTER 100.1A – 200A

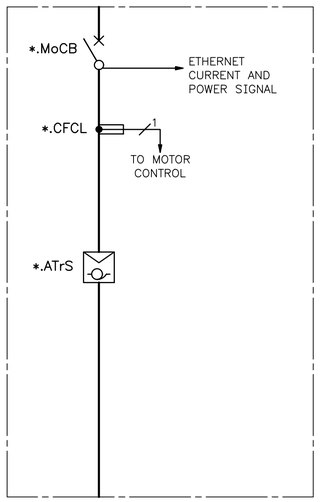

ATr STARTER 200.1A – 263A

CODE SCHEDULE

A	AMMETER
ATrS	AUTOTRANSFORMER STARTER
CFCL	CONTROL FAULT CURRENT LIMITER
CuTr	CURRENT TRANSFORMER AND TRANSDUCER
DOLS	DIRECT ON LINE STARTER
MCT	METERING CURRENT TRANSFORMER
MoCB	MOTOR CIRCUIT BREAKER
MPR	MOTOR PROTECTION RELAY
PFCL	POWER TRANSDUCER FAULT CURRENT LIMITER
PTPF	POWER TRANSDUCER POTENTIAL FUSE
PTr	POWER TRANSDUCER

DESIGN CRITERIA

AUTO–TRANSFORMER STARTER SELECTION IS BASED ON THE FOLLOWING CRITERIA

1. *MOTOR LOCKED ROTOR CURRENT ASSUMED 8 x FLC FOR MOTORS LESS THAN OR EQUAL TO 18.5kW*
2. *MOTOR LOCKED ROTOR CURRENT ASSUMED 7 x FLC FOR MOTORS GREATER THAN 18.5kW*
3. *DUTY CYCLE OF 5 x 3 SECOND STARTS PER HOUR, WITH MAXIMUM 2 CONSECUTIVE STARTS*

ISSUE	DATE	GRID	REVISION	DRN	REC	APPD
D	01/2024		COMMUNICATIONS PROTOCOL, CFCL AND PFCL SYMBOLS REVISED	SAM	TK	EG
C	11/2019		GREATER THAN 100A STARTERS REVISED	PH	EG	NJ
B	02/2019		MoFC AND MoSD DELETED; MPR AND MoCB SPECIFICATION AND PFCL AND PTPF REVISED	PH	EG	NJ

DESIGN SURVEY NONE | VERTICAL DATUM NONE | COORDINATE SYS NONE | ASCON SURVEY NONE | DES REF | DES CALC E FONG | DES CHD K O'GRADY | DRN P HARVEY | Q.C. CHD S MEMORY | NORTH POINT

SUBMITTED 24/07/2017 E FONG (SIGNED) SENIOR ENGINEER – ELECTRICAL

RECOMMENDED 24/07/2017 K O'GRADY (SIGNED) PRINCIPAL ENGINEER – ELECTRICAL

APPROVED 24/07/2017 N JOHNSON (SIGNED) SNR PRINCIPAL ENGINEER – ELECT

ENGINEERING

WATER CORPORATION

ELECTRICAL STANDARD SWITCHBOARD DESIGNS
SMALL PUMP STATIONS
PRIMARY DESIGN – POWER DIAGRAM TEMPLATE OPTIONS
MOTOR STARTERS – BORE – PART 1

FILE | PLAN MN01–14–1.1 | CAD | ISSUE D | PROJECT | MF

ORIGINAL SHEET SIZE A1

© THIS DRAWING IS THE PROPERTY OF THE WATER CORPORATION. IT SHALL NOT BE COPIED WITHOUT PERMISSION.

STANDARDS\APPROVED\MN01\PREAPPROVAL\MN01–014–001–01D 17:18 12/01/2024 MEMORYSO/NB46194

566
810