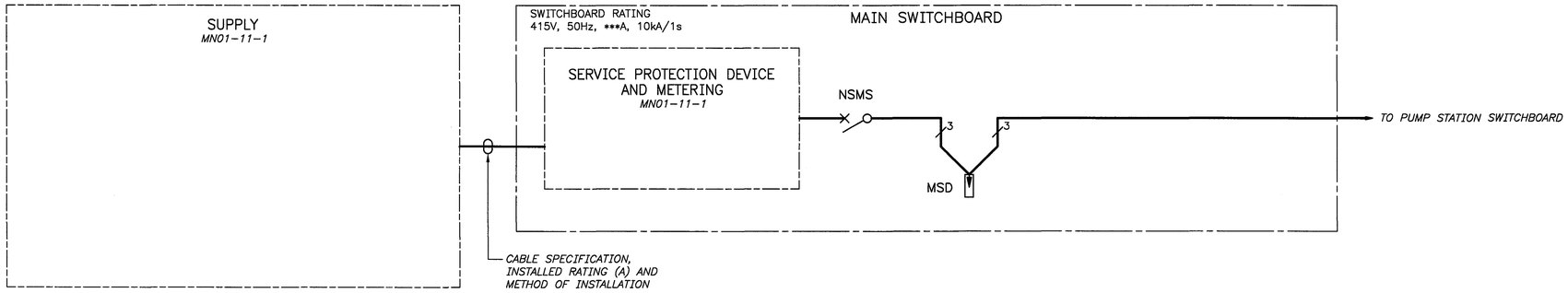

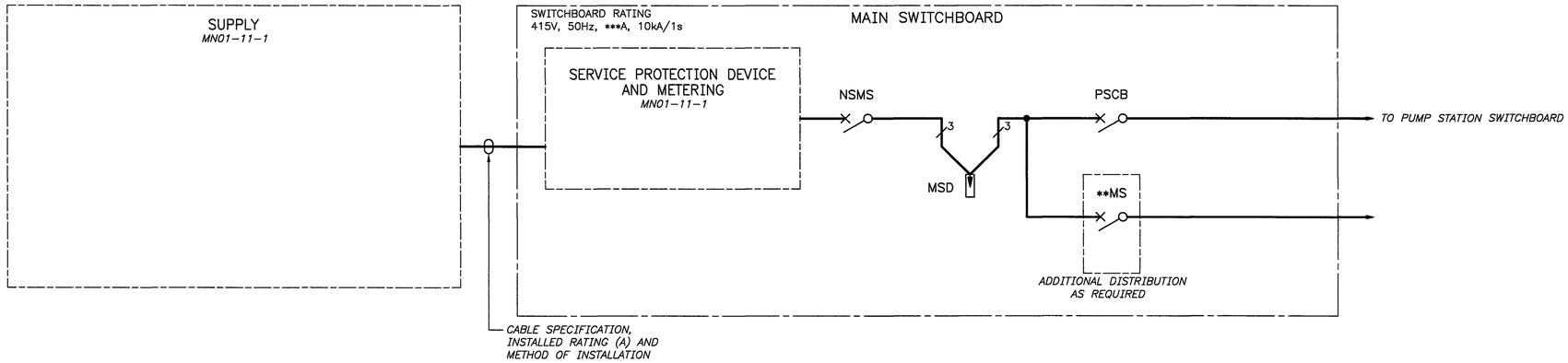

PROTECTION EQUIPMENT SCHEDULE

CODE	MAIN SWBD RATED CURRENT	SPECIFICATION
NSMS	100A	SCHNEIDER ELECTRIC, COMPACT NSX100F : 100A, 36kA, COMPLETE WITH MICROLOGIC *.2, ***A TRIP UNIT
PSCB *OR* **MS	100A	SCHNEIDER ELECTRIC, iC60H : **A, 10kA CIRCUIT BREAKER *OR* SCHNEIDER ELECTRIC, COMPACT NSX100F : 100A, 36kA, COMPLETE WITH MICROLOGIC *.2, ***A TRIP UNIT

CODE SCHEDULE

MS	MAIN SWITCH
MSD	MAINS SURGE DIVERTER
NSMS	NORMAL SUPPLY MAIN SWITCH
PSCB	PUMP STATION SWITCHBOARD SUPPLY CIRCUIT BREAKER

GENERAL NOTES

1. CONSTRUCT SWITCHBOARD IN ACCORDANCE WITH THE WATER CORPORATION STANDARD SPECIFICATION DS26.9 FOR GENERAL SWITCHBOARD REQUIREMENTS DS26.36 FOR SWITCHBOARDS RATED ≤ 100A
2. NEUTRAL AND EARTH CONNECTIONS NOT SHOWN

DESIGN NOTES

1. *REFER TO BUNDLES 31 TO 40 FOR EXAMPLES OF PROJECT ELECTRICAL PRIMARY DESIGN DRAWINGS*
2. *ITALIC TEXT, ASTERISKS AND SELECTION BOXES INDICATE A PROJECT SPECIFIC VARIABLE TO BE DETAILED BY THE ELECTRICAL DESIGN ENGINEER*
3. *FOR FUSE SPD MAXIMUM SIZE OF CABLE THAT CAN BE TERMINATED IS 50mm² Cu XLPE*

ISSUE	DATE	GRID	REVISION	DRN	REC	APPD

DESIGN SURVEY NONE | VERTICAL DATUM NONE | COORDINATE SYS NONE | ASCON SURVEY NONE | DES REF

DES CALC | DES CHD | DRN | Q.C. CHD

NORTH POINT

SUBMITTED 26/2/19 SENIOR ENGINEER – ELECTRICAL

RECOMMENDED 26/2/19 PRINCIPAL ENGINEER – ELECTRICAL

APPROVED 26/2/19. SNR PRINCIPAL ENGINEER – ELECT

ENGINEERING

WATER CORPORATION

ELECTRICAL STANDARD SWITCHBOARD DESIGNS
SMALL PUMP STATIONS
PRIMARY DESIGN – POWER DIAGRAM TEMPLATE
MINI CUBICLE – 100A MAIN SWITCHBOARD

FILE | PROJECT | PLAN MN01-1-4 | CAD | ISSUE A

ORIGINAL SHEET SIZE A1

MF 26 FEB 2019

566 810

© THIS DRAWING IS THE PROPERTY OF THE WATER CORPORATION. | IT SHALL NOT BE COPIED WITHOUT PERMISSION.

STANDARDS\APPROVED\MN01\MN01-001-004-01A 09:53 25/02/2019 harveyp0/WS27105