DocuSign Envelope ID: ACD6EF36-0C12-492E-847D-213A14613C85

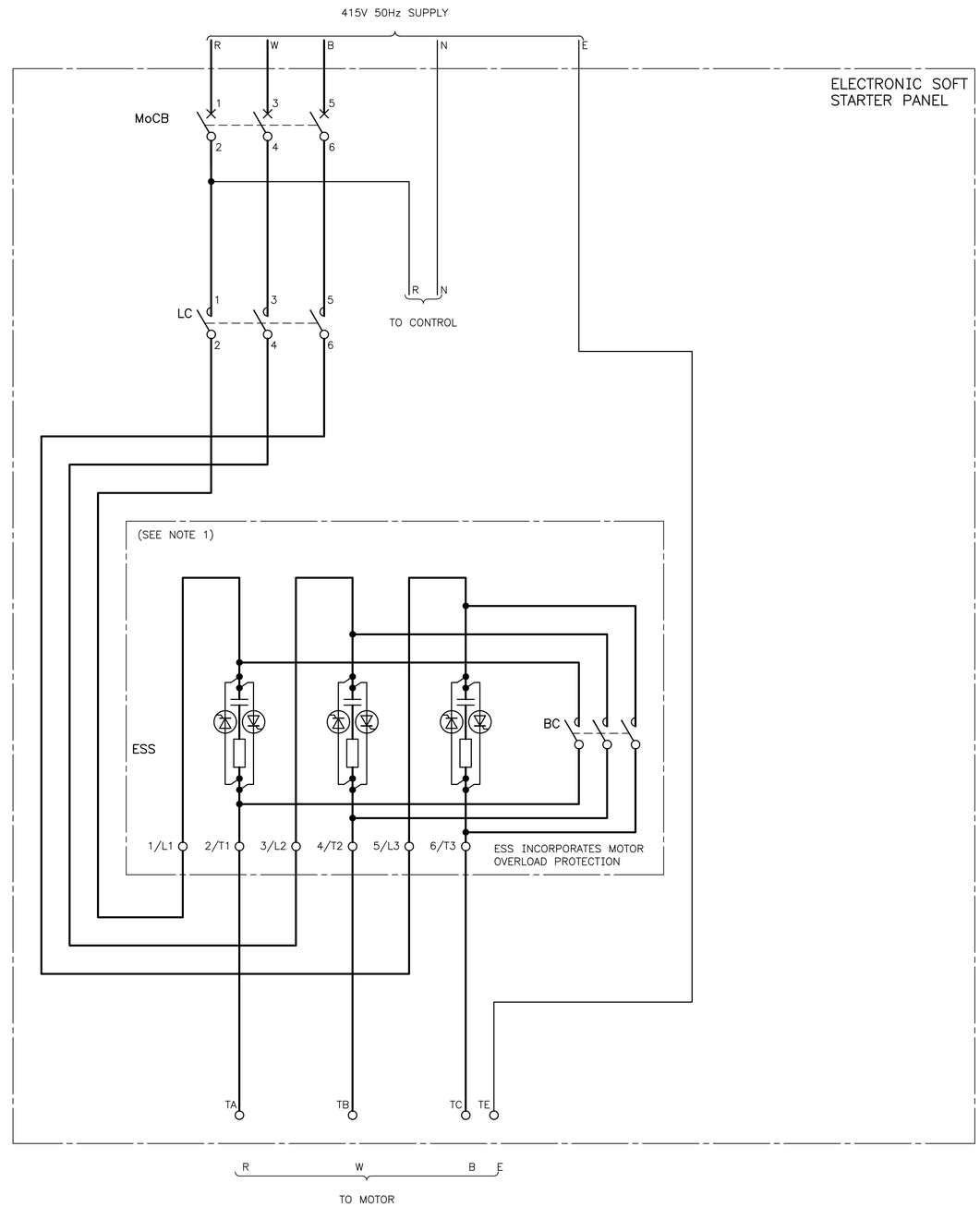

5.4A – 100A

CODE SCHEDULE

BC	BYPASS CONTACTOR
ESS	ELECTRONIC SOFT STARTER
LC	LINE CONTACTOR
MoCB	MOTOR CIRCUIT BREAKER

GENERAL NOTES

1. FOR 4–20mA CURRENT SIGNAL OUTPUT REFER TO MN01–22–8

ISSUE	DATE	GRID	REVISION	DRN	REC	APPD
E	03/2021		CURRENT RANGES AND POWER DIAGRAMS REVISED	PH	~~PK~~	~~EG~~
D	10/2020		SEMI CONDUCTOR PROTECTION FUSES DELETED	PH	EG	NJ
C	11/2019		STARTER CURRENTS AND 4TH LINE TITLE REVISED	PH	EG	NJ
B	02/2019		PFCL AND PTPF REVISED	PH	EG	NJ

DESIGN SURVEY NONE | VERTICAL DATUM NONE | COORDINATE SYS NONE | ASCON SURVEY NONE | DES REF | DES CALC E FONG | DES CHD K O'GRADY | DRN P HARVEY | Q.C. CHD S MEMORY | NORTH POINT

SUBMITTED 24/07/2017 E FONG (SIGNED) SENIOR ENGINEER – ELECTRICAL

RECOMMENDED 24/07/2017 K O'GRADY (SIGNED) PRINCIPAL ENGINEER – ELECTRICAL

APPROVED 24/07/2017 N JOHNSON (SIGNED) SNR PRINCIPAL ENGINEER – ELECT

ENGINEERING

WATER CORPORATION

ELECTRICAL STANDARD SWITCHBOARD DESIGNS
SMALL PUMP STATIONS
MOTOR STARTER REFERENCE – WASTEWATER
ELECTRONIC SOFT STARTER – POWER DIAGRAM 5.4A – 100A

FILE | PLAN MN01–22–7.1 | CAD | ISSUE E | ORIGINAL SHEET SIZE A1
PROJECT | MF

STANDARDS\APPROVED\MN01\MN01–022–007–01E 11:20 05/03/2021 HARVEYPO/WS27105

© THIS DRAWING IS THE PROPERTY OF THE WATER CORPORATION. IT SHALL NOT BE COPIED WITHOUT PERMISSION.