DocuSign Envelope ID: ACD6EF36-0C12-492E-847D-213A14613C85

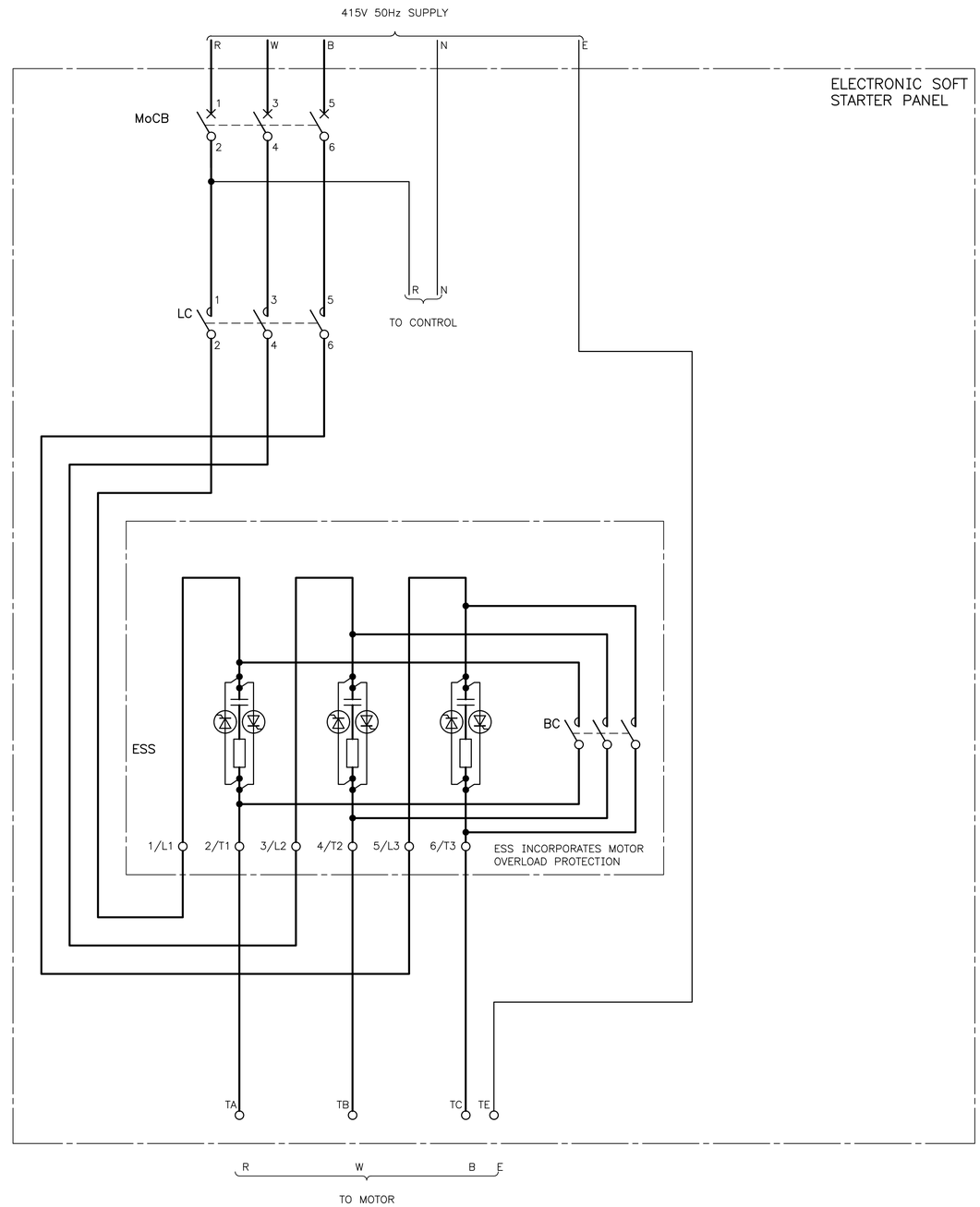

CODE SCHEDULE

BC	BYPASS CONTACTOR
ESS	ELECTRONIC SOFT STARTER
LC	LINE CONTACTOR
MoCB	MOTOR CIRCUIT BREAKER

4.1A – 100A

ISSUE	DATE	GRID	REVISION	DRN	REC	APPD
E	03/2021		CURRENT RANGES AND POWER DIAGRAMS REVISED	PH	~~EG~~	~~EG~~
D	10/2020		SEMI CONDUCTOR PROTECTION FUSES DELETED	PH	EG	NJ
C	11/2019		POWER DIAGRAMS AND 4TH LINE TITLE REVISED	PH	EG	NJ
B	02/2019		PFCL AND PTPF REVISED; MoFC AND MoSD DELETED	PH	EG	NJ

DESIGN SURVEY NONE | VERTICAL DATUM NONE | COORDINATE SYS NONE | ASCON SURVEY NONE | DES REF

DES CALC E FONG | DES CHD K O'GRADY | DRN P HARVEY | Q.C. CHD S MEMORY

NORTH POINT

SUBMITTED 24/07/2017 E FONG (SIGNED) SENIOR ENGINEER – ELECTRICAL

RECOMMENDED 24/07/2017 K O'GRADY (SIGNED) PRINCIPAL ENGINEER – ELECTRICAL

APPROVED 24/07/2017 N JOHNSON (SIGNED) SNR PRINCIPAL ENGINEER – ELECT

ENGINEERING

WATER CORPORATION

ELECTRICAL STANDARD SWITCHBOARD DESIGNS
SMALL PUMP STATIONS
MOTOR STARTER REFERENCE – BORE
ELECTRONIC SOFT STARTER – POWER DIAGRAM 4.1A – 100A

FILE | PLAN MN01–24–7.1 | CAD | ISSUE E | ORIGINAL SHEET SIZE A1

PROJECT | MF

568
810

© THIS DRAWING IS THE PROPERTY OF THE WATER CORPORATION. IT SHALL NOT BE COPIED WITHOUT PERMISSION.

STANDARDS\APPROVED\MN01\MN01–024–007–01E 11:21 05/03/2021 HARVEYPO/WS27105