DocuSign Envelope ID: ACD6EF36-0C12-492E-847D-213A14613C85

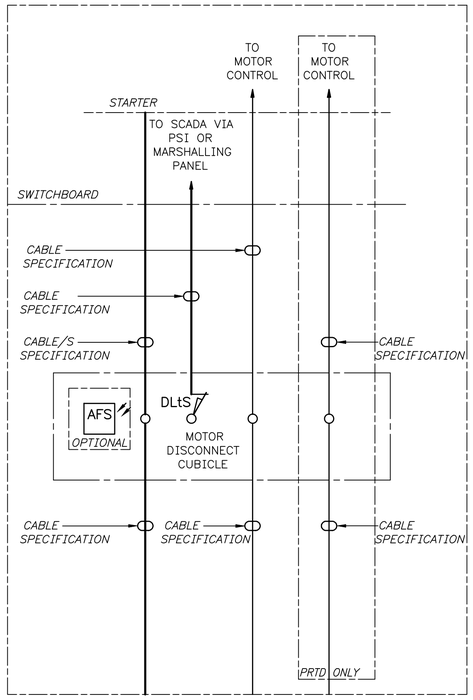

MOTOR DISCONNECT CUBICLE
SEE DESIGN NOTE 2

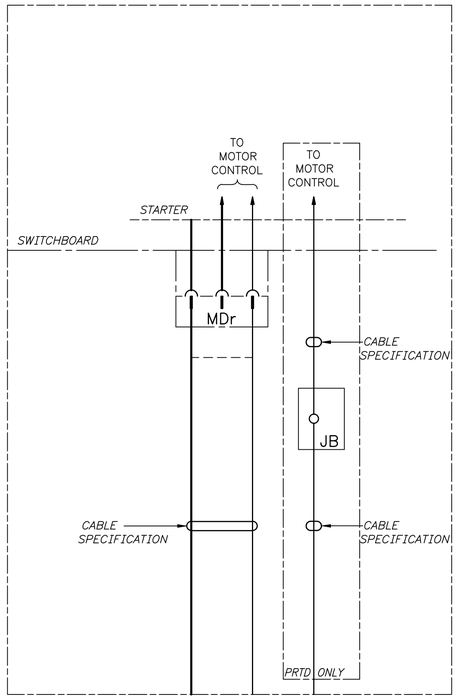

DECONTACTOR – CUBICLE MOUNTED
SEE DESIGN NOTE 2

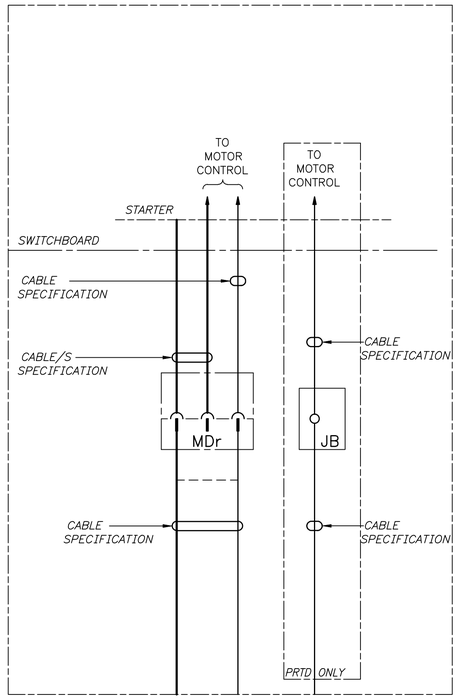

DECONTACTOR – FIELD MOUNTED
SEE DESIGN NOTE 2

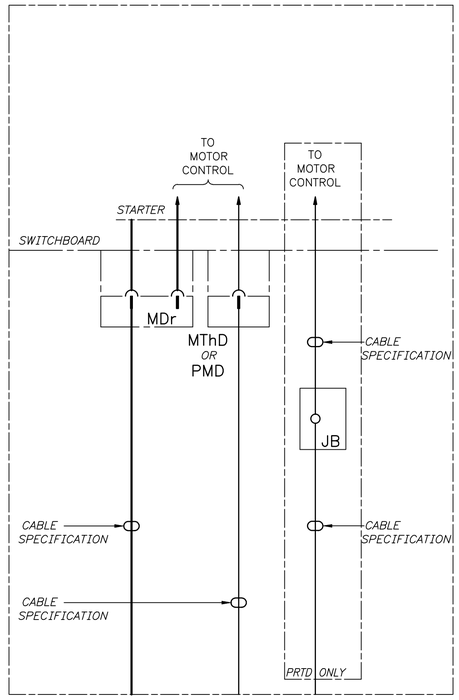

SEPARATE DECONTACTORS – CUBICLE MOUNTED
SEE DESIGN NOTE 2

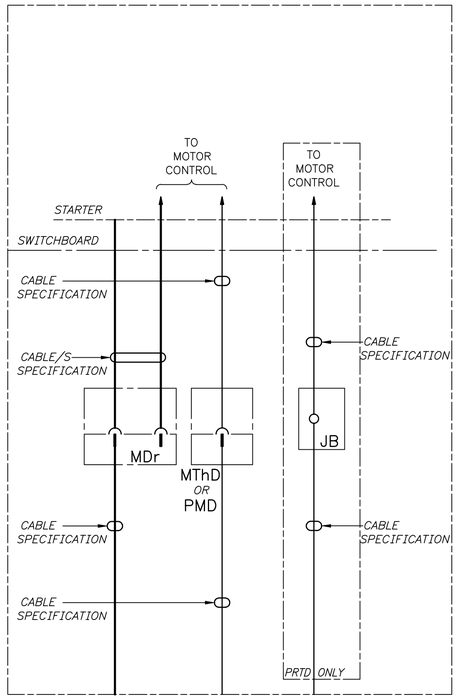

SEPARATE DECONTACTORS – FIELD MOUNTED
SEE DESIGN NOTE 2

MOTOR CONNECTION OPTIONS
SEE DESIGN NOTE 1

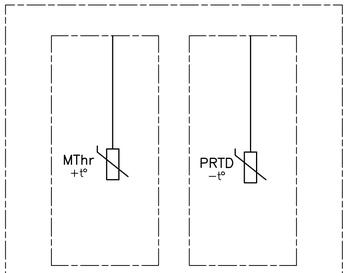

MOTOR/PUMP MONITORING OPTIONS

LEGEND

AFS — ARC FLASH SENSORS LOCATED WITHIN

CODE SCHEDULE

AFS	ARC FLASH SENSOR
DLtS	DOOR LIMIT SWITCH
JB	JUNCTION BOX
MDr	MOTOR DECONTACTOR
MThr	MOTOR THERMISTOR
PRTD	PUMP RESISTANCE TEMPERATURE DETECTOR
PSI	POWER SYSTEM INTERFACE

DESIGN NOTES

1. *MOTOR AND PUMP MONITORING MAY ALSO BE DIRECT CONNECTED DEPENDENT ON PROJECT REQUIREMENTS*
2. *THE CONNECTION/DISCONNECTION METHOD (i.e. DECONTACTOR OR DISCONNECT CUBICLE) SHALL BE DETERMINED BY THE DESIGNER IN CONSULTATION WITH THE DESIGN MANAGER. THE MAXIMUM RATING OF A DECONTACTOR SHALL NOT EXCEED 90A*

ISSUE	DATE	GRID	REVISION	DRN	REC	APPD
D	03/2021		MOTOR DISCONNECT CUBICLE DOOR LIMIT SWITCH REVISED	PH	~~TK~~	~~EG~~
C	06/2019		DESIGN NOTE 2 ADDED	PH	EG	NJ
B	05/2018		DECONTACTOR SYMBOLOGY REVISED; DOOR LIMIT SWITCH ADDED MDr INTERLOCK CIRCUIT ADDED; NOTE 2 DELETED	PH	EF	KOG

DESIGN SURVEY: NONE
VERTICAL DATUM: NONE
COORDINATE SYS: NONE
ASCON SURVEY: NONE
DES REF
DES CALC: E FONG
DES CHD: K O'GRADY
DRN: P HARVEY
Q.C. CHD: S MEMORY
NORTH POINT

ENGINEERING

SUBMITTED 24/07/2017
E FONG (SIGNED)
SENIOR ENGINEER – ELECTRICAL

RECOMMENDED 24/07/2017
K O'GRADY (SIGNED)
PRINCIPAL ENGINEER – ELECTRICAL

APPROVED 24/07/2017
N JOHNSON (SIGNED)
SNR PRINCIPAL ENGINEER – ELECT

WATER CORPORATION

ELECTRICAL STANDARD SWITCHBOARD DESIGNS
SMALL PUMP STATIONS
PRIMARY DESIGN – POWER DIAGRAM TEMPLATE OPTIONS
MOTOR CONNECTIONS – WATER

FILE
PROJECT
PLAN MN01–13–2
CAD
ISSUE D
ORIGINAL SHEET SIZE A1
MF

566
810

© THIS DRAWING IS THE PROPERTY OF THE WATER CORPORATION. IT SHALL NOT BE COPIED WITHOUT PERMISSION.

STANDARDS\APPROVED\MN01\MN01–013–002–01D 11:18 05/03/2021 HARVEYPO/WS27105