DocuSign Envelope ID: D02654E8-1738-4B59-B551-4B2FDB7E3BF1

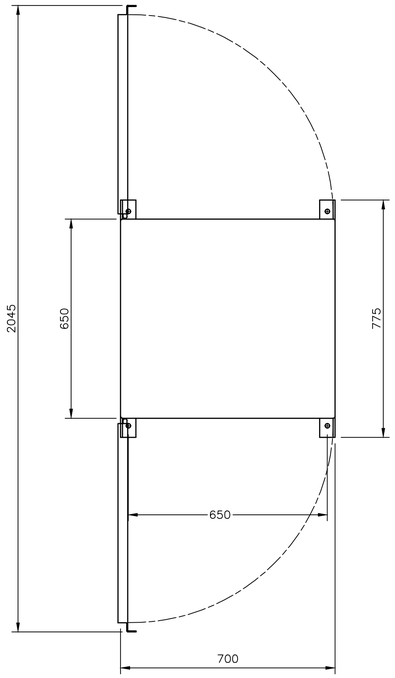

TOP VIEW

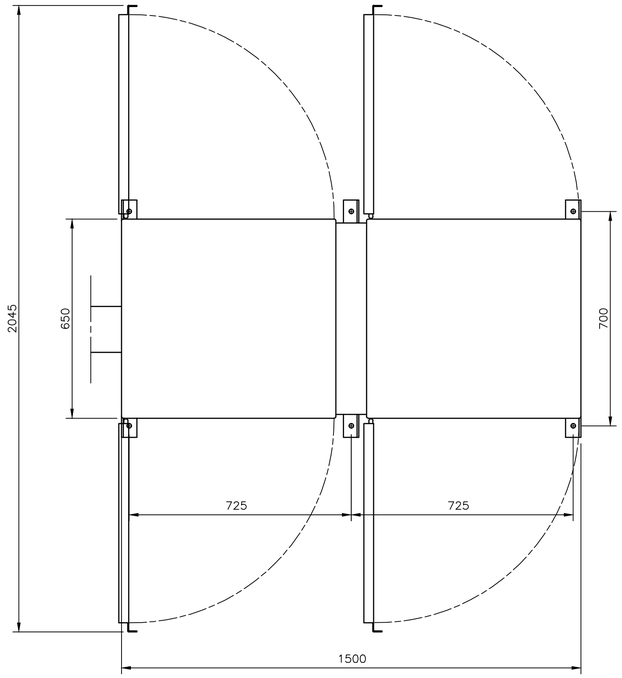

TOP VIEW

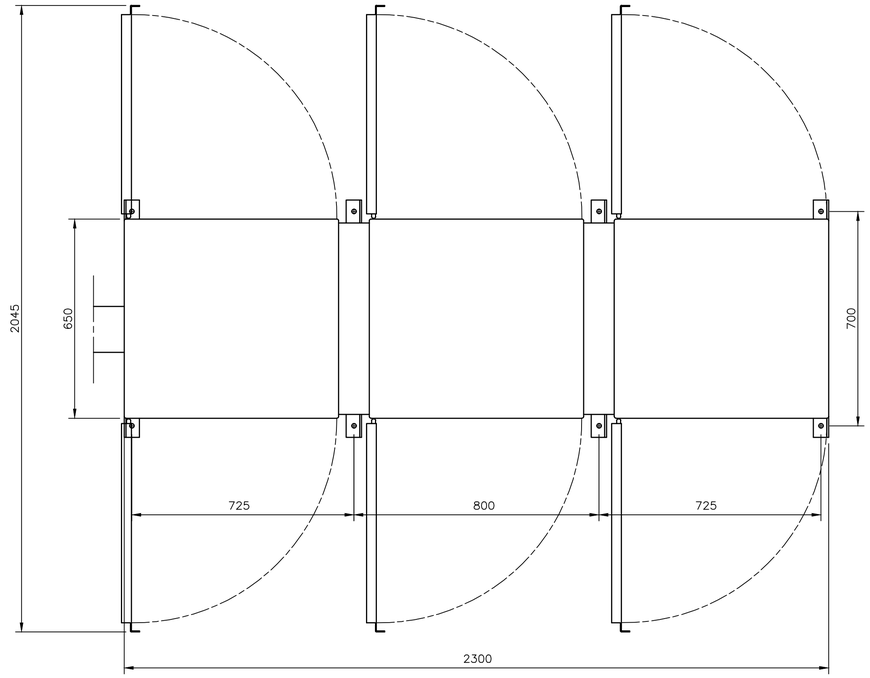

TOP VIEW

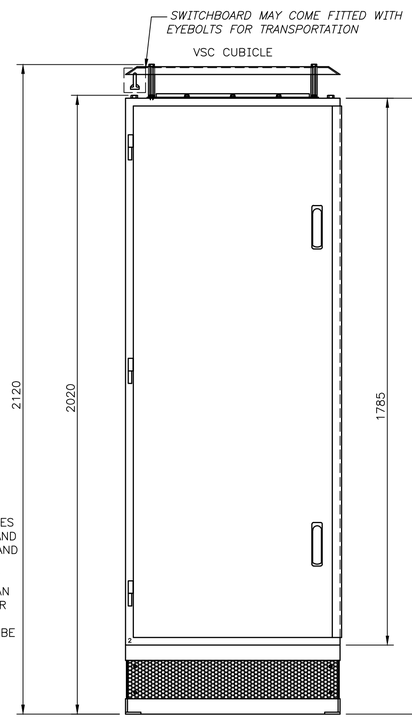

FRONT VIEW

ONE VSC CUBICLE
WITH 225 HIGH BASE

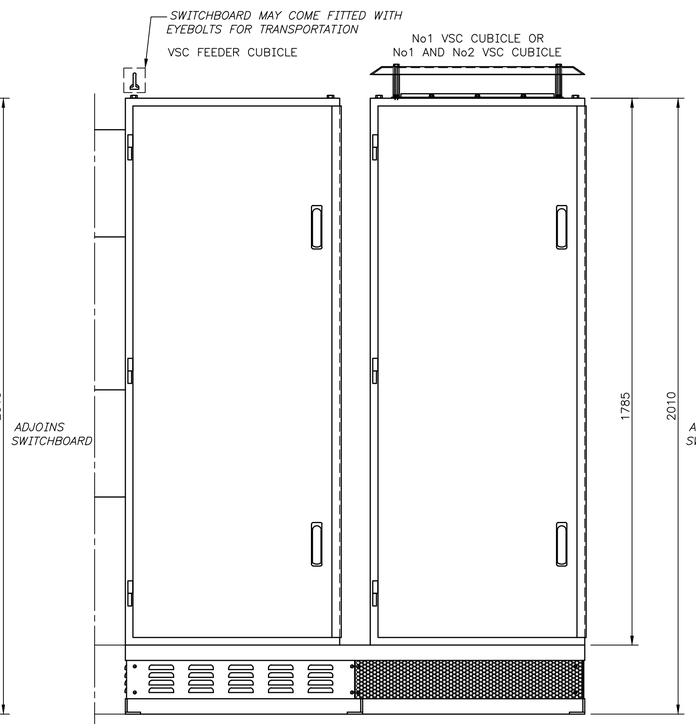

FRONT VIEW

ONE FEEDER CUBICLE AND ONE VSC CUBICLE
WITH 225 HIGH BASE

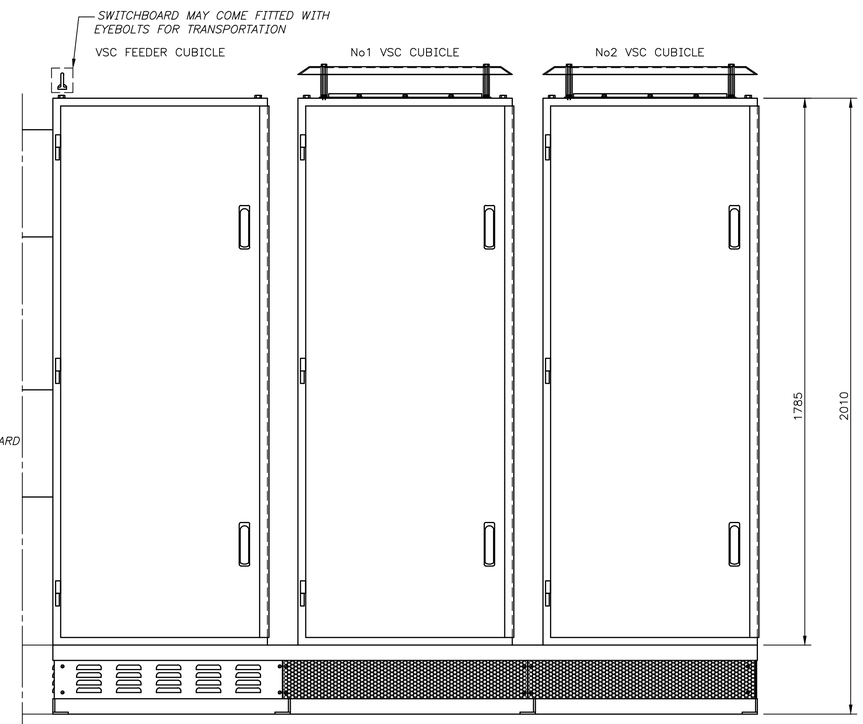

FRONT VIEW

ONE FEEDER CUBICLE AND TWO VSC CUBICLES
WITH 225 HIGH BASE

GENERAL NOTES

1. UNLESS OTHERWISE SHOWN ALL DIMENSIONS ARE IN MILLIMETRES
2. THE STANDARD FRONT DOOR ARRANGEMENT SHALL BE RIGHT HAND OPENING AND THE BACK DOOR ARRANGEMENT SHALL BE LEFT HAND OPENING FOR ALL SWITCHBOARDS
3. WHERE AN ALTERNATE FRONT AND/OR BACK DOOR ARRANGEMENT IS CONSIDERED NECESSARY TO SUIT PROJECT REQUIREMENTS. AN APPROVAL FOR DISPENSATION SHALL BE SORT FROM THE SENIOR PRINCIPAL ENGINEER, ELECTRICAL STANDARDS, ENGINEERING.
4. FRONT OF SWITCHBOARD AND DOOR OPENING ARRANGEMENT TO BE CLEARLY DEFINED ON SITE LAYOUT DRAWING
5. 50 HIGH BASE SHALL NOT BE USED FOR VSC CUBICLE

100 50 0 100 200 300 400 500 600 700 mm

1:10 AT SHEET SIZE A1

ISSUE	DATE	GRID	REVISION	DRN	REC	APPD

DESIGN SURVEY NONE	VERTICAL DATUM NONE	DES CALC S GILMOUR	NORTH POINT
	COORDINATE SYS NONE	DES CHD T LIU	
ASCON SURVEY NONE	DES REF	DRN SA MEMORY	
		Q.C. CHD P HARVEY	

SUBMITTED 16/06/2023
SA MEMORY (SIGNED)
SENIOR TECHNICAL ADVISOR – ELECT

RECOMMENDED 16/06/2023
S GILMOUR (SIGNED)
SENIOR ENGINEER – ELECTRICAL

APPROVED 16/06/2023
T LIU (SIGNED)
PRINCIPAL ENGINEER – ELECTRICAL

ENGINEERING

WATER CORPORATION

ELECTRICAL STANDARD SWITCHBOARD DESIGNS
SMALL PUMP STATIONS
SWITCHBOARD REFERENCE
MK8 OUTDOOR SWITCHBOARD–VSC CUBICLE DIMS & DOOR DETAILS

FILE | PLAN MN01–21–5.1 | CAD | ISSUE A | ORIGINAL SHEET SIZE A1
PROJECT | MF

© THIS DRAWING IS THE PROPERTY OF THE WATER CORPORATION. IT SHALL NOT BE COPIED WITHOUT PERMISSION.

STANDARDS\APPROVED\MN01\MN01-021-005-01A 10:41 16/06/2023 MEMORYSO/NB46194

568
810