DocuSign Envelope ID: 5851920E-C631-4A30-8911-92EF12CC166C

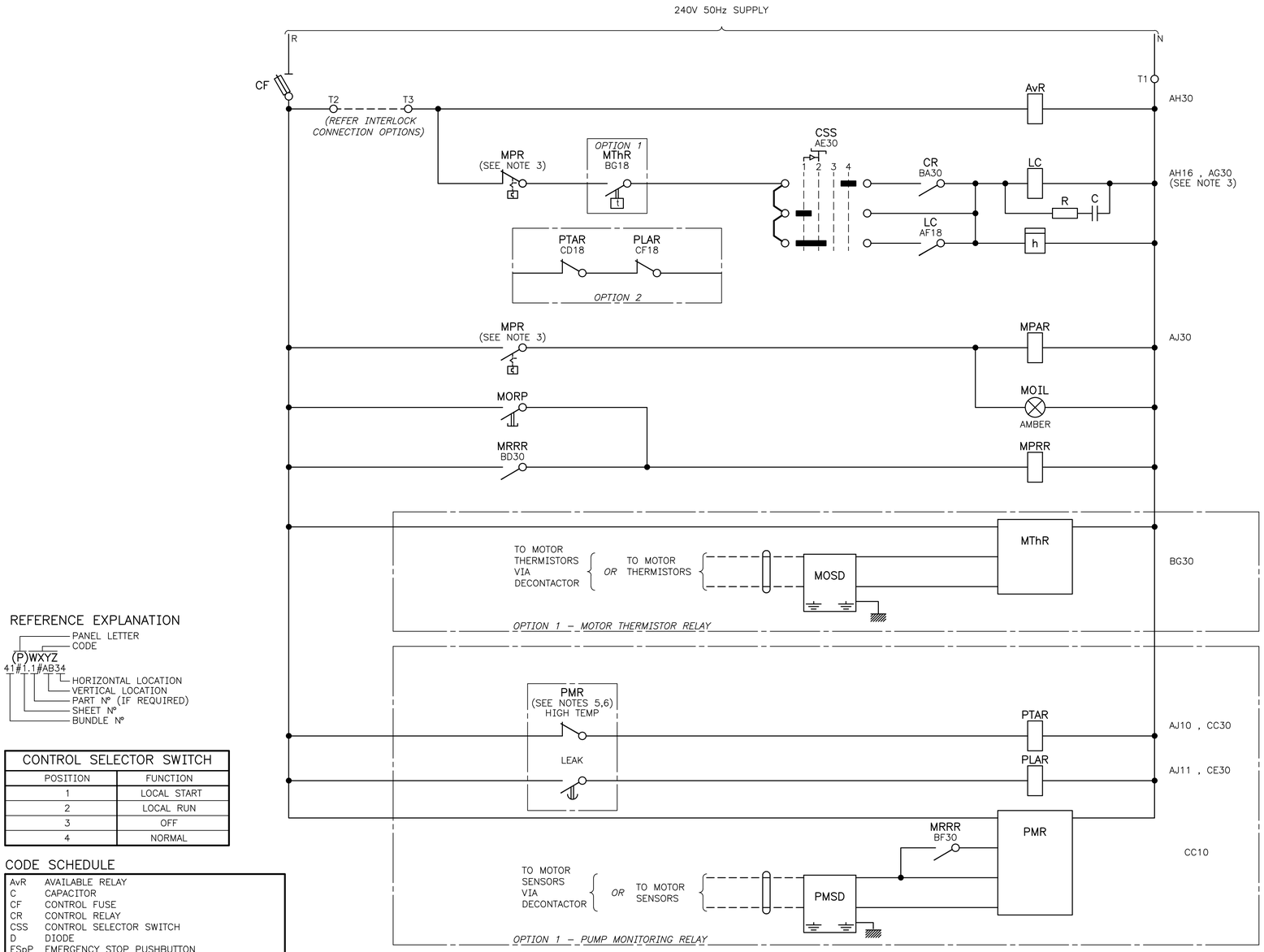

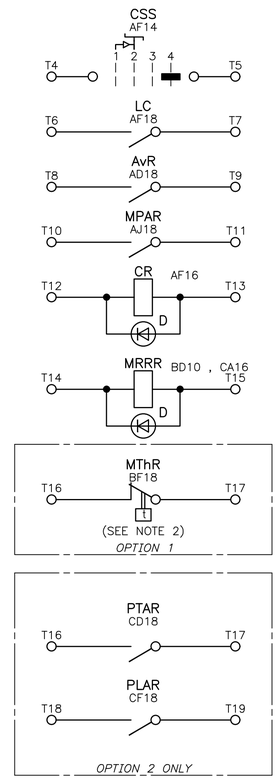

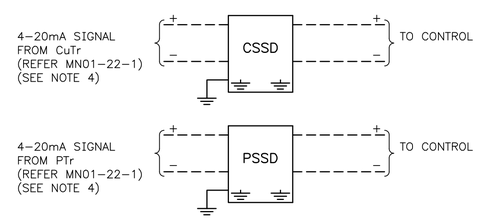

CONTROL INTERCONNECTIONS

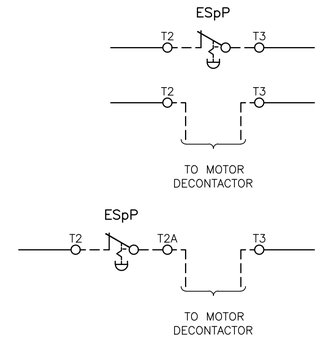

INTERLOCK CONNECTION OPTIONS

SELECTION DEPENDENT ON APPLICATION

REFERENCE EXPLANATION

(P)WXYZ
41#1.1#AB34

- PANEL LETTER
- CODE
- HORIZONTAL LOCATION
- VERTICAL LOCATION
- PART Nº (IF REQUIRED)
- SHEET Nº
- BUNDLE Nº

CONTROL SELECTOR SWITCH

POSITION	FUNCTION
1	LOCAL START
2	LOCAL RUN
3	OFF
4	NORMAL

CODE SCHEDULE

AvR	AVAILABLE RELAY
C	CAPACITOR
CF	CONTROL FUSE
CR	CONTROL RELAY
CSS	CONTROL SELECTOR SWITCH
D	DIODE
ESpP	EMERGENCY STOP PUSHBUTTON
h	HOUR METER
LC	LINE CONTACTOR
MOIL	MOTOR OVERLOAD FAULT INDICATING LIGHT
MORP	MOTOR OVERLOAD FAULT RESET PUSHBUTTON
MOSD	MOTOR OVERTEMPERATURE SURGE DIVERTER
MPAR	MOTOR PROTECTION AUXILIARY RELAY
MPR	MOTOR PROTECTION RELAY
MPRR	MOTOR PROTECTION RELAY RESET
MRRR	MOTOR PROTECTION REMOTE RESET RELAY
MThR	MOTOR THERMISTOR RELAY
PLAR	PUMP LEAK ALARM RELAY
PMR	PUMP MONITORING RELAY
PMSD	PUMP MONITORING SURGE DIVERTER
PTAR	PUMP MOTOR HIGH TEMPERATURE ALARM RELAY
R	RESISTOR

GENERAL NOTES

1. DRAWN NO POWER CONDITION
2. MOTOR THERMISTOR RELAY CONTACTS CHANGE STATE ON ENERGIZATION
3. FOR CONTACTOR MAIN POLES AND MPR COIL REFER TO MN01–22–1
4. POWER AND CURRENT SIGNAL SURGE DIVERTERS MAY BE OMITTED WHERE SWITCHBOARD AND CONTROL CUBICLE ARE MOUNTED ON THE SAME CONCRETE SLAB OR WHERE POWER SYSTEM INTERFACE IS USED
5. PUMP MONITORING RELAY 'HIGH TEMP ALARM' CONTACT CHANGES STATE ON ENERGIZATION
6. PUMP MONITORING RELAY 'LEAK ALARM' CONTACT DOES NOT CHANGE STATE ON ENERGIZATION

ISSUE	DATE	GRID	REVISION	DRN	REC	APPD
F	01/2023		PTAR CONTROL CONTACT REVISED	PH		EG
E	01/2022		MThR AND PMR CONTACTS ADDED TO PRIMARY PROTECTION	PH	TL	EG
D	03/2021		AvR CONTROL WIRING REVISED	PH	TL	EG
C	10/2020		AvR CONTROL WIRING REVISED	PH	EG	NJ
B	02/2019		CONTROL FUSE, 4TH LINE TITLE AND NOTE 4 REVISED	PH	EG	NJ

566
810

DESIGN SURVEY NONE	VERTICAL DATUM NONE	DES CALC E FONG	NORTH POINT
	COORDINATE SYS NONE	DES CHD K O'GRADY	
ASCON SURVEY NONE	DES REF	DRN P HARVEY	
		Q.C. CHD S MEMORY	

ENGINEERING

SUBMITTED 24/07/2017
E FONG (SIGNED)
SENIOR ENGINEER – ELECTRICAL

RECOMMENDED 24/07/2017
K O'GRADY (SIGNED)
PRINCIPAL ENGINEER – ELECTRICAL

APPROVED 24/07/2017
N JOHNSON (SIGNED)
SNR PRINCIPAL ENGINEER – ELECT

WATER CORPORATION

ELECTRICAL STANDARD SWITCHBOARD DESIGNS
SMALL PUMP STATIONS
MOTOR STARTER REFERENCE – WASTEWATER
DOL STARTER – CONTROL DIAGRAM 5.4A – 100A

FILE
PROJECT
PLAN MN01–22–2
CAD
ISSUE F
ORIGINAL SHEET SIZE A1
MF

© THIS DRAWING IS THE PROPERTY OF THE WATER CORPORATION. IT SHALL NOT BE COPIED WITHOUT PERMISSION.

STANDARDS\APPROVED\MN01\MN01–022–002–01F 08:25 24/01/2023 HARVEYPO/NB46193