DocuSign Envelope ID: 24381753-08F0-4DCD-B103-7A44A7082BFA

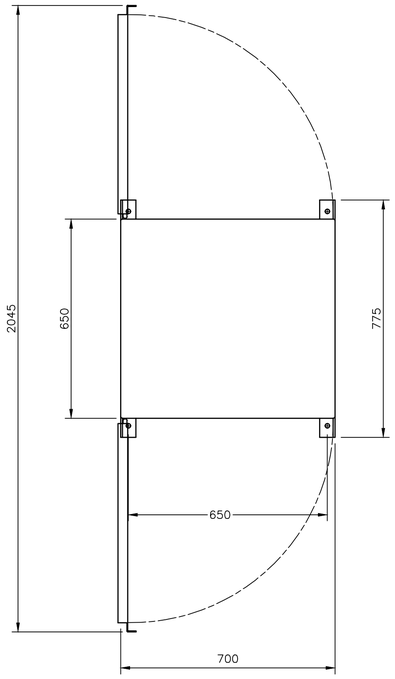

TOP VIEW

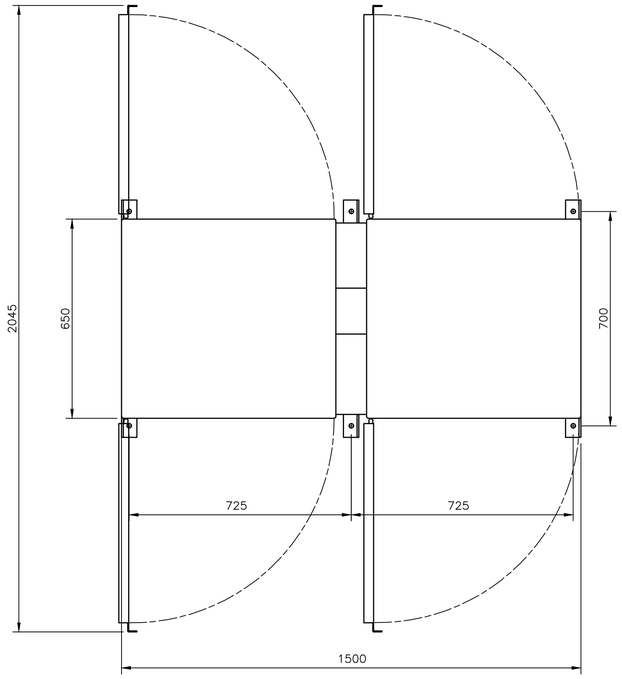

TOP VIEW

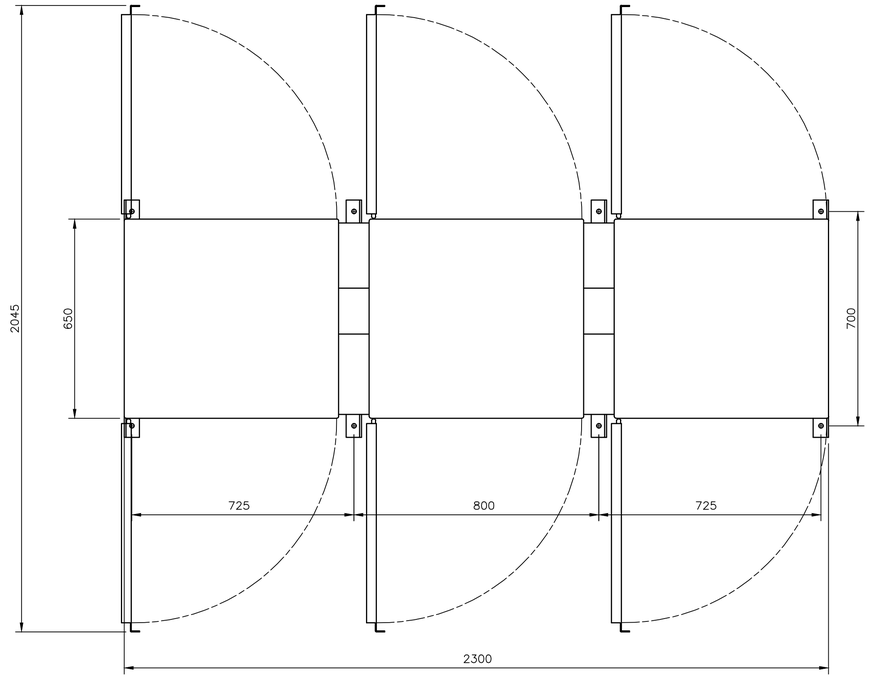

TOP VIEW

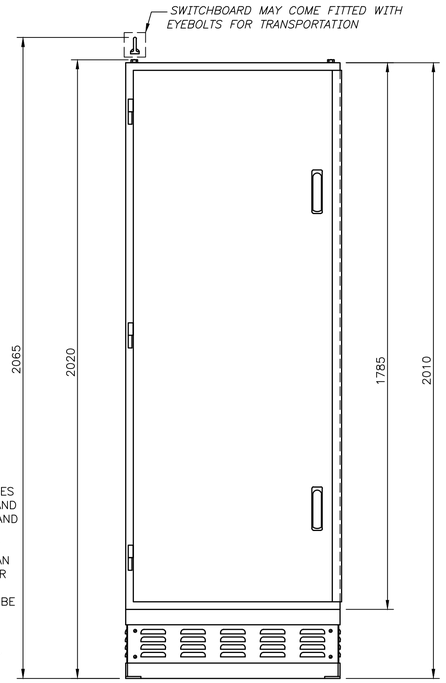

FRONT VIEW

SINGLE CUBICLE SWITCHBOARD
WITH 225 HIGH BASE

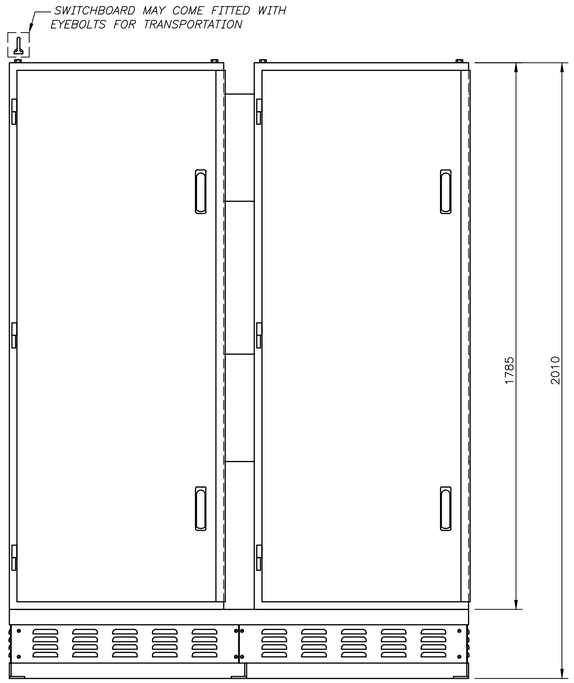

FRONT VIEW

TWO CUBICLE SWITCHBOARD
WITH 225 HIGH BASE

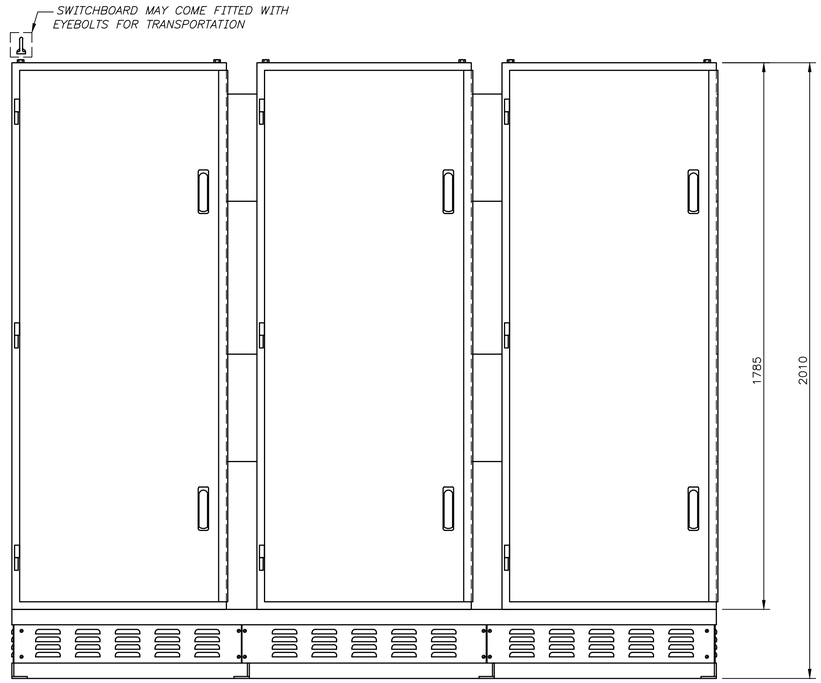

FRONT VIEW

THREE CUBICLE SWITCHBOARD
WITH 225 HIGH BASE

GENERAL NOTES

1. UNLESS OTHERWISE SHOWN ALL DIMENSIONS ARE IN MILLIMETRES
2. THE STANDARD FRONT DOOR ARRANGEMENT SHALL BE RIGHT HAND OPENING AND THE BACK DOOR ARRANGEMENT SHALL BE LEFT HAND OPENING FOR ALL SWITCHBOARDS
3. WHERE AN ALTERNATE FRONT AND/OR BACK DOOR ARRANGEMENT IS CONSIDERED NECESSARY TO SUIT PROJECT REQUIREMENTS. AN APPROVAL FOR DISPENSATION SHALL BE SORT FROM THE SENIOR PRINCIPAL ENGINEER, ELECTRICAL STANDARDS, ENGINEERING.
4. FRONT OF SWITCHBOARD AND DOOR OPENING ARRANGEMENT TO BE CLEARLY DEFINED ON SITE LAYOUT DRAWING
5. REFER PROJECT DESIGN MANAGER FOR APPLICATIONS USING LEGACY 450 DEEP (MK7) CUBICLES
6. ALTERNATIVE 50 HIGH BASE AVAILABLE IF REQUIRED. TYPICALLY USED WITH DUCTS UNDER SWITCHBOARD AND SWITCHBOARDS MOUNTED ON PLATFORMS

100 50 0 100 200 300 400 500 600 700 mm

1:10 AT SHEET SIZE A1

ISSUE	DATE	GRID	REVISION	DRN	REC	APPD
F	01/2024		CUBICLE HEIGHT DIMENSION REVISED	SAM	TK	EG
E	10/2022		INTERCONNECTING DUCT REPOSITIONED ON TOP VIEW	SAM	SWG	EG
D	03/2021		SWITCHBOARD DOORS RE-ARRANGED. THREE CUBICLE VERSION ADDED. NOTE 2 REVISED, NOTES 3-5 RENUMBERED. NEW NOTE 3 ADDED. 4TH LINE TITLE REVISED	PH	TL	EG
C	10/2020		DOOR DETAILS AND EYE BOLTS REVISED	PH	EG	NJ
B	02/2019		TWO CUBICLE TOP VIEW REVISED	PH	EG	NJ

DESIGN SURVEY NONE | VERTICAL DATUM NONE | COORDINATE SYS NONE | ASCON SURVEY NONE | DES REF

DES CALC E FONG | DES CHD K O'GRADY | DRN P HARVEY | Q.C. CHD S MEMORY

NORTH POINT

ENGINEERING

SUBMITTED 24/07/2017 E FONG (SIGNED) SENIOR ENGINEER – ELECTRICAL

RECOMMENDED 24/07/2017 K O'GRADY (SIGNED) PRINCIPAL ENGINEER – ELECTRICAL

APPROVED 24/07/2017 N JOHNSON (SIGNED) SNR PRINCIPAL ENGINEER – ELECT

WATER CORPORATION

ELECTRICAL STANDARD SWITCHBOARD DESIGNS
SMALL PUMP STATIONS
SWITCHBOARD REFERENCE
MK8 OUTDOOR SWITCHBOARD–CUBICLE DIMENSIONS & DOOR DETAILS

FILE | PLAN MN01–21–1.1 | CAD | ISSUE F | ORIGINAL SHEET SIZE A1

PROJECT | MF

566 810

© THIS DRAWING IS THE PROPERTY OF THE WATER CORPORATION. IT SHALL NOT BE COPIED WITHOUT PERMISSION.

STANDARDS\APPROVED\MN01\PREAPPROVAL\MN01–021–001–01F 17:18 12/01/2024 MEMORYSO/NB46194