DocuSign Envelope ID: 24381753-08F0-4DCD-B103-7A44A7082BFA

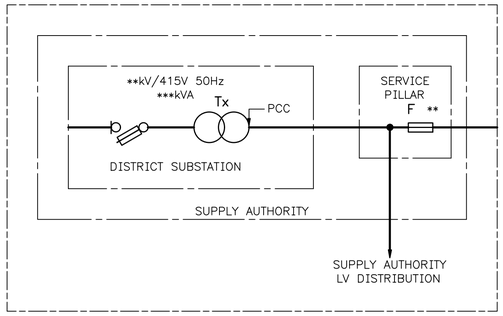

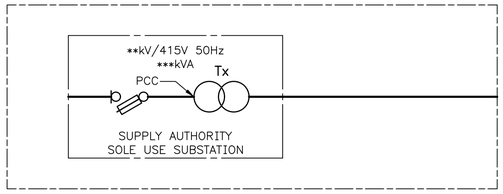

(TABLE AND DATA TO BE INCLUDED WITH SUPPLY OPTIONS)

3 PHASE FAULT LEVELS AND SOURCE IMPEDANCE			
FAULT TYPE	Zpu on 100MVA BASE	VOLTAGE	FAULT LEVEL
HV MAX SOURCE IMPEDANCE	**+j**	**kV	**kA
HV MIN SOURCE IMPEDANCE	**+j**	**kV	**kA
LV MAX SOURCE IMPEDANCE	**+j**	415V	**kA
LV MIN SOURCE IMPEDANCE	**+j**	415V	**kA

(VALUES TO BE CALCULATED AT A VOLTAGE FACTOR 'C' OF '1')

TRANSFORMER IMPEDANCE = **%
STARTING FREQUENCY = * STARTS/HOUR
MAX CALCULATED VOLTAGE DIP AT PCC = **%
MAX CALCULATED VOLTAGE DIP AT SPD = **%
SHORT TERM FLICKER EMISSION LIMIT P_{st} = **
CALCULATED SHORT TERM FLICKER EMISSION P_{st} = **
TOTAL HARMONIC VOLTAGE DISTORTION LIMIT = **%
CALCULATED TOTAL HARMONIC VOLTAGE DISTORTION = **%
HARMONIC CURRENT LIMITS = ** *TOTAL DEMAND DISTORTION AND/OR INDIVIDUAL*
CALCULATED HARMONIC CURRENT LIMITS = ** *TOTAL DEMAND DISTORTION AND/OR INDIVIDUAL*
(VOLTAGE AND CURRENT HARMONIC LIMITS FOR VSD APPLICATIONS ONLY)

SUPPLY OPTIONS
SEE DESIGN NOTE 5

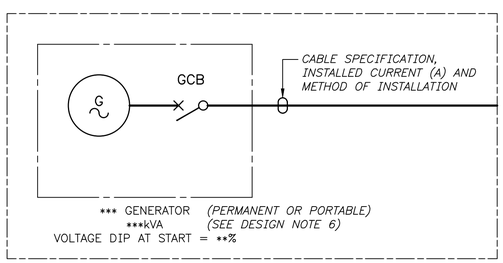

GENERATOR OPTION

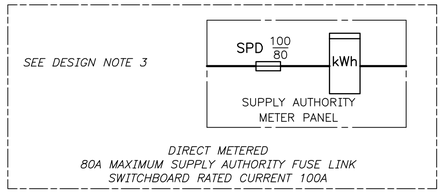

DIRECT METERED
80A MAXIMUM SUPPLY AUTHORITY FUSE LINK
SWITCHBOARD RATED CURRENT 100A

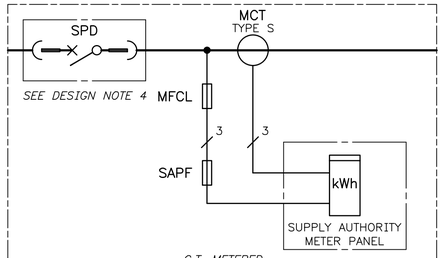

C.T. METERED
(FOR USE BETWEEN 81–100A ONLY)
SPD LIMITED TO 100A
SWITCHBOARD RATED CURRENT 100A

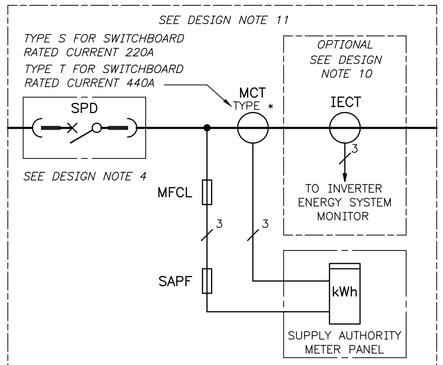

SWITCHBOARD RATED CURRENT 220A OR 440A

SERVICE PROTECTION DEVICE AND METERING OPTIONS

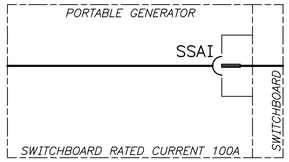

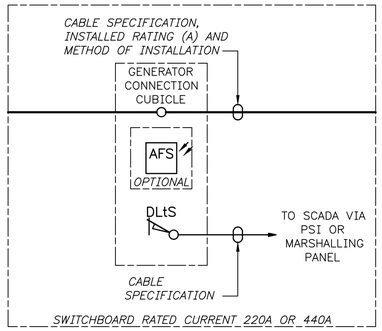

GENERATOR CONNECTION OPTIONS

CODE SCHEDULE

AFS	ARC FLASH SENSOR
ATS	AUTOMATIC TRANSFER SWITCH
DLtS	DOOR LIMIT SWITCH
F	FUSE
GCB	GENERATOR CIRCUIT BREAKER
IECF	INVERTER ENERGY SYSTEM CONTROL FUSE
IECT	INVERTER ENERGY SYSTEM CURRENT TRANSFORMER
IFCL	INVERTER ENERGY SYSTEM FAULT CURRENT LIMITER
ISMS	INVERTER SUPPLY MAIN SWITCH
kWh	KILOWATT HOUR METER
MCT	METERING CURRENT TRANSFORMER
MFCL	METERING FAULT CURRENT LIMITER
MSD	MAINS SURGE DIVERTER
NSMI	NORMAL SUPPLY MAIN ISOLATOR
NSMS	NORMAL SUPPLY MAIN SWITCH
PCC	POINT OF COMMON COUPLING
PF	POTENTIAL FUSE
PMFC	POWER MONITORING FAULT CURRENT LIMITER
PSMC	POWER SUPPLY MONITOR CURRENT TRANSFORMER
SAPF	SUPPLY AUTHORITY POTENTIAL FUSE
SCS	SUPPLY CHANGEOVER SWITCH
SFCB	SURGE FAULT CURRENT LIMITING CIRCUIT BREAKER
SFCL	SURGE DIVERTER FAULT CURRENT LIMITER
SPD	SERVICE PROTECTION DEVICE
SSAI	STANDBY SUPPLY APPLIANCE INLET
SSMS	STANDBY SUPPLY MAIN SWITCH
Tx	TRANSFORMER
VMF	VOLTAGE MONITORING FUSE

PROTECTION EQUIPMENT SCHEDULE

CODE	SWITCHBOARD RATED CURRENT	SPECIFICATION
SPD	100A (DIRECT METERED)	80A FUSE
	100A (C.T. METERED)	SCHNEIDER ELECTRIC, COMPACT NSX160F : 160A, 36kA, COMPLETE WITH MICROLOGIC *.*, ***A TRIP UNIT
	220A	SCHNEIDER ELECTRIC, COMPACT NSX250F : 250A, 36kA, COMPLETE WITH MICROLOGIC *.*, ***A TRIP UNIT
	440A	SCHNEIDER ELECTRIC, COMPACT NSX630F : 630A, 36kA, COMPLETE WITH MICROLOGIC *.*, ***A TRIP UNIT
NSMS SSMS NSMI	100A	SCHNEIDER ELECTRIC, COMPACT NSX100F : 100A, 36kA, COMPLETE WITH MICROLOGIC *.2, ***A TRIP UNIT
	220A	SCHNEIDER ELECTRIC, COMPACT NSX250F : 250A, 36kA, COMPLETE WITH MICROLOGIC *.*, ***A TRIP UNIT
	440A	SCHNEIDER ELECTRIC, COMPACT NSX630F : 630A, 36kA, COMPLETE WITH MICROLOGIC 5.3, ***A TRIP UNIT
ISMS	100A	SCHNEIDER ELECTRIC, iC60H : **A, 10kA CIRCUIT BREAKER
	220A	SCHNEIDER ELECTRIC, COMPACT NSX***F : ***A, 36kA, COMPLETE WITH MICROLOGIC *.*, ***A TRIP UNIT
	440A	SCHNEIDER ELECTRIC, COMPACT NSX630F : ***A, 36kA, COMPLETE WITH MICROLOGIC 5.3, ***A TRIP UNIT

LEGEND
AFS — ARC FLASH SENSORS LOCATED WITHIN

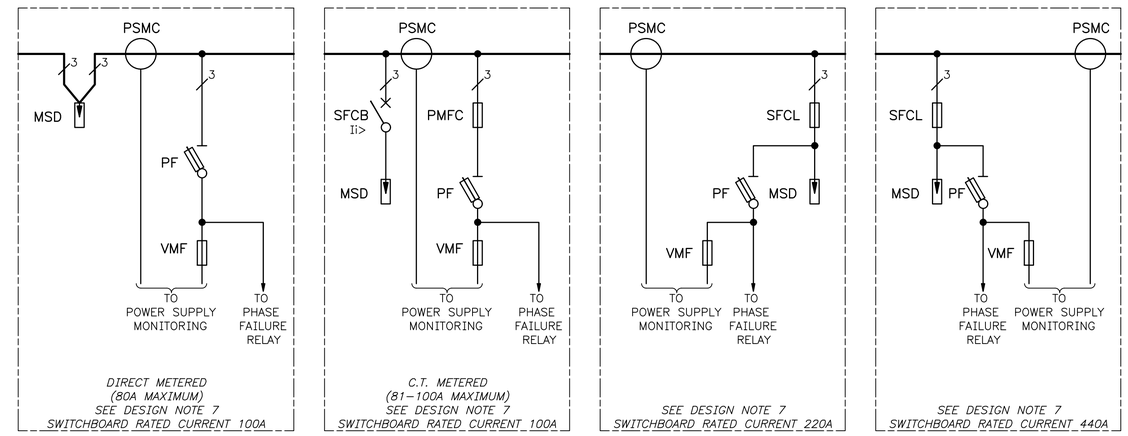

MAINS SURGE DIVERTER AND POWER MONITORING

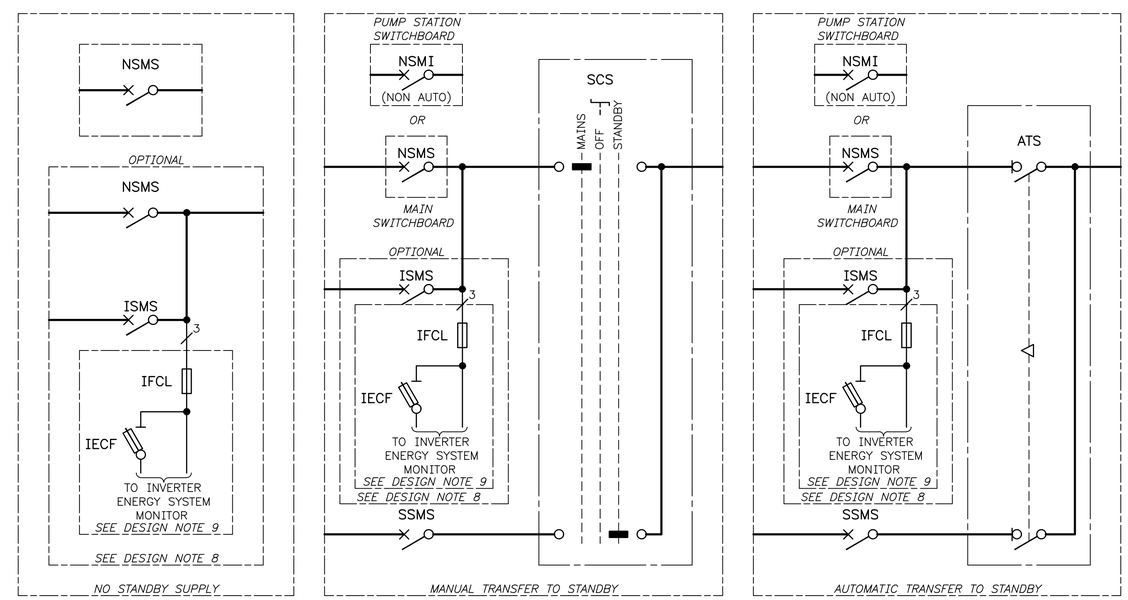

MAIN SWITCH, MAIN ISOLATOR/TRANSFER SWITCH OPTIONS

DESIGN NOTES
1. REFER TO BUNDLES 31 TO 40 FOR EXAMPLES OF PROJECT ELECTRICAL PRIMARY DESIGN DRAWINGS
2. ITALIC TEXT AND ASTERISKS INDICATE A PROJECT SPECIFIC VARIABLE TO BE DETAILED BY THE ELECTRICAL DESIGN ENGINEER
3. FOR FUSE SPD MAXIMUM SIZE OF CABLE THAT CAN BE TERMINATED IS 50mm² Cu XLPE
4. FOR SCHNEIDER ELECTRIC COMPACT NSX160 CIRCUIT BREAKERS, MAXIMUM INCOMING CABLE SIZE THAT CAN BE TERMINATED IS 1x150mm² Cu XLPE OR 2x95mm² Cu XLPE
   FOR SCHNEIDER ELECTRIC COMPACT NSX250 CIRCUIT BREAKERS, MAXIMUM INCOMING CABLE SIZE THAT CAN BE TERMINATED IS 1x150mm² Cu XLPE OR 2x95mm² Cu XLPE
   FOR SCHNEIDER ELECTRIC COMPACT NSX630 CIRCUIT BREAKERS, MAXIMUM INCOMING CABLE SIZE THAT CAN BE TERMINATED IS 1x240mm² Cu XLPE OR 2x185mm² Cu XLPE
5. FOR WATER CORPORATION OWNED SUBSTATIONS ELECTRICAL DESIGN ENGINEER TO DETERMINE HV DISTRIBUTION ARRANGEMENTS
6. DESIGNER TO NOMINATE RATED kVA OF PERMANENT GENERATOR OR MINIMUM kVA REQUIRED FOR PORTABLE GENERATOR
7. POWER MONITORING IS REQUIRED IN THE MAIN SWITCHBOARD OR AT THE COMMON POINT OF SUPPLY. ADDITIONAL POWER MONITORING CAN BE ADDED DEPENDENT ON PROJECT REQUIREMENTS
8. LOW VOLTAGE EMBEDDED GENERATION SYSTEM REQUIREMENTS TO BE DEFINED BY ELECTRICAL DESIGN ENGINEER
9. INVERTER ENERGY SYSTEM MONITORING REQUIREMENTS TO BE DEFINED BY ELECTRICAL DESIGN ENGINEER
10. INCLUDE INVERTER ENERGY SYSTEM CURRENT TRANSFORMER WHERE REVERSE POWER PROTECTION REQUIRED
11. ELECTRICAL DESIGN ENGINEER TO CONFIRM METERING CURRENT TRANSFORMER TYPE AS PART OF SUPPLY AUTHORITY FEASIBILITY STUDY REQUEST

ISSUE	DATE	GRID	REVISION	DRN	REC	APPD
I	01/2024		IFCL SYMBOLS REVISED. DIRECT METERED SUPPLY SPD FUSE LINK SET AT 80A. 81–100A CT METERED VERSION ADDED. 100A CT METERED MAINS SURGE DIVERTER VERSION ADDED. 100A CT METERED SPECIFICATION ADDED TO MATERIAL SCHEDULE	SAM	TK	EG ET
H	09/2023		GENERATOR CONNECTION CUBICLE DOOR LIMIT SWITCH ADDED	SAM	SG	TL
G	11/2021		GENERATOR CABLE NOTE REVISED	PH	TL	EG
F	07/2021		SUPPLY VALUES, FAULT TABLE REVISED; PCC REFERENCE ADDED	PH	TL	EG

DESIGN SURVEY NONE | VERTICAL DATUM NONE | COORDINATE SYS NONE | ASCON SURVEY NONE | DES REF | DES CALC E FONG | DES CHD K O'GRADY | DRN P HARVEY | Q.C. CHD S MEMORY | NORTH POINT

SUBMITTED 24/07/2017 E FONG (SIGNED) SENIOR ENGINEER – ELECTRICAL
RECOMMENDED 24/07/2017 K O'GRADY (SIGNED) PRINCIPAL ENGINEER – ELECTRICAL
APPROVED 24/07/2017 N JOHNSON (SIGNED) SNR PRINCIPAL ENGINEER – ELECT

ENGINEERING

WATER CORPORATION

ELECTRICAL STANDARD SWITCHBOARD DESIGNS
SMALL PUMP STATIONS
PRIMARY DESIGN – POWER DIAGRAM TEMPLATE OPTIONS
INCOMING MAINS

FILE | PROJECT | PLAN MN01–11–1 | CAD | ISSUE I | ORIGINAL SHEET SIZE A1 | MF

© THIS DRAWING IS THE PROPERTY OF THE WATER CORPORATION. IT SHALL NOT BE COPIED WITHOUT PERMISSION.

STANDARDS\APPROVED\MN01\PREAPPROVAL\MN01–011–001–01I 17:18 12/01/2024 MEMORYS0/NB46194