DocuSign Envelope ID: 24381753-08F0-4DCD-B103-7A44A7082BFA

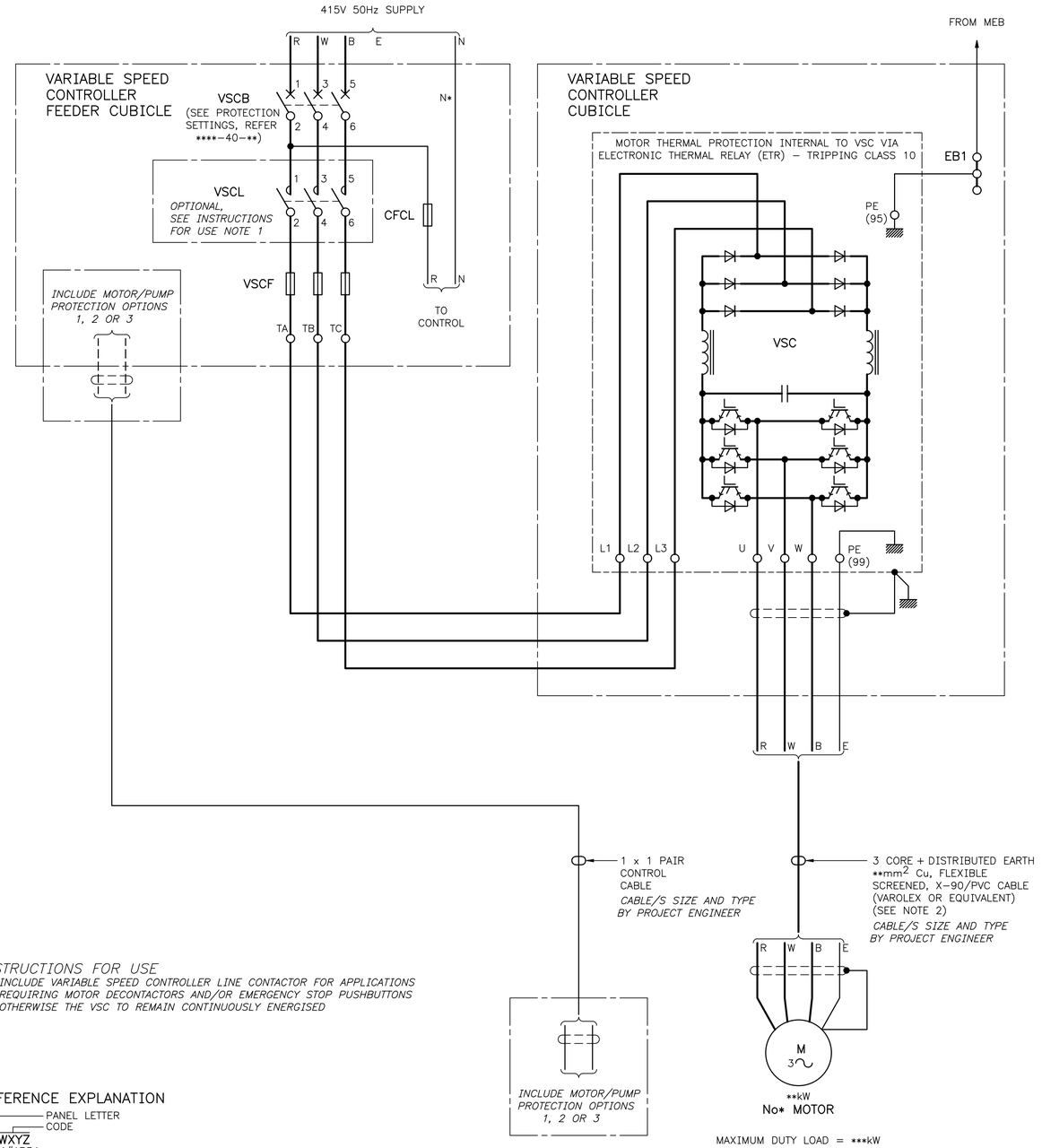

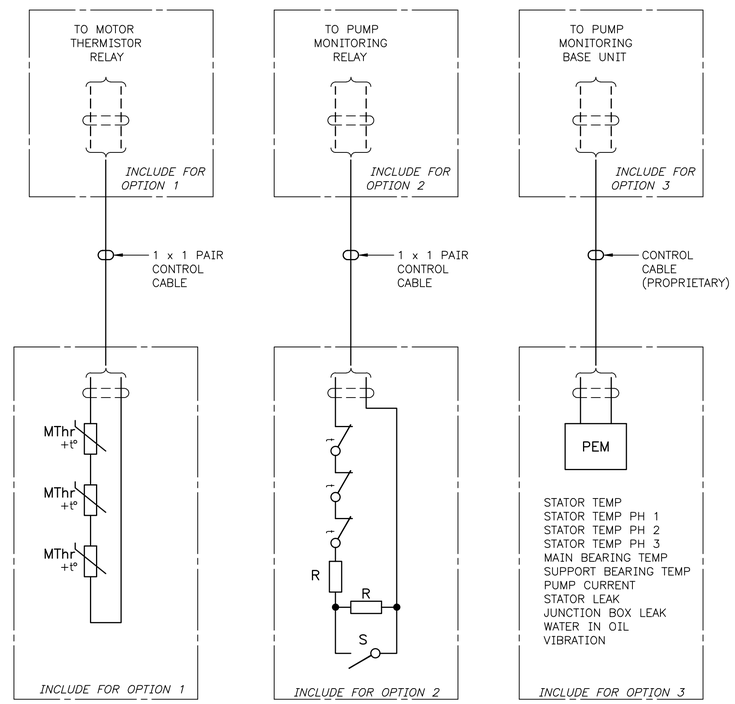

OPTION TABLE

No	DESCRIPTION
1	MOTOR WITH THERMISTORS
2	MOTOR WITH THERMAL SWITCH AND STATOR LEAK SENSOR (FLYGT MINICAS II)
3	MOTOR WITH STATOR TEMPERATURE SWITCH AND STATOR THERMAL SENSORS. INCLUDES BEARING, CURRENT, LEAK AND VIBRATION SENSORS (FLYGT MAS801)

CODE SCHEDULE

CFCL	CONTROL FAULT CURRENT LIMITER
EB1	EARTH BAR No1
MThr	MOTOR THERMISTOR
PEM	PUMP ELECTRONIC MODULE
R	RESISTOR
S	SWITCH
VSC	VARIABLE SPEED CONTROLLER
VSCB	VARIABLE SPEED CONTROLLER CIRCUIT BREAKER
VSCF	VARIABLE SPEED CONTROLLER FUSE
VSCL	VARIABLE SPEED CONTROLLER LINE CONTACTOR

INSTRUCTIONS FOR USE

1. *INCLUDE VARIABLE SPEED CONTROLLER LINE CONTACTOR FOR APPLICATIONS REQUIRING MOTOR DECONTACTORS AND/OR EMERGENCY STOP PUSHBUTTONS OTHERWISE THE VSC TO REMAIN CONTINUOUSLY ENERGISED*

REFERENCE EXPLANATION

(P)WXYZ
41#1.1#AB34

- PANEL LETTER
- CODE
- HORIZONTAL LOCATION
- VERTICAL LOCATION
- PART N° (IF REQUIRED)
- SHEET N°
- BUNDLE N°

GENERAL NOTES

1. DRAWN NO POWER CONDITION
2. SEGREGATION AND SCREENING OF THE VSC MAINS, MOTOR, CONTROL AND COMMUNICATIONS CABLES SHALL BE IN ACCORDANCE WITH THE MANUFACTURER'S INSTRUCTIONS. SCREENS SHALL BE EARTHED AT BOTH ENDS USING EMC CABLE GLANDS WITH 360 DEGREE CONTACT. PIGTAILS SHALL NOT BE USED TO TERMINATE SCREENS
3. MOTOR WINDING OVERTEMPERATURE PROTECTION (MOTOR THERMISTORS OR APPROVED ALTERNATIVE) SHALL BE INSTALLED IF REQUIRED BY DS22, SECTION 4
4. A LINE REACTOR OR HARMONIC FILTER SHALL BE INSTALLED IF NECESSARY TO COMPLY WITH HARMONIC DISTORTION LIMITS SPECIFIED IN DS22, SECTION 7

VSC ONLY (NO FILTERING REQUIRED)

DESIGN NOTES

1. *FOR WASTEWATER APPLICATIONS (FLC ≤ 100A) MOTOR THERMAL PROTECTION INTERNAL TO VSC VIA ELECTRONIC THERMAL RELAY (ETR) - TRIPPING CLASS 10*
2. *FOR WASTEWATER APPLICATIONS (FLC >100A AND ≤ 263A) MOTOR THERMAL PROTECTION EXTERNAL TO VSC VIA MOTOR PROTECTION RELAY - TRIPPING CLASS 5*
3. *SINE-WAVE FILTERS ARE NOT STANDARD FOR SEWAGE PUMP MOTOR APPLICATIONS*
4. *FOR VSC UPGRADE PROJECTS WHERE EXISTING MOTOR CABLES ARE NOT IN ACCORDANCE WITH DS22 SECTION 10.2, OR EXISTING MOTOR INSULATION NOT RATED FOR USE WITH VARIABLE SPEED CONTROLLERS, A SINE-WAVE FILTER MAY BE REQUIRED.*

VSC DESIGN CRITERIA

1. *MAXIMUM OUTPUT CURRENT OF VSC IN AN OUTDOOR MK 8 VSC VENTILATED CUBICLE IS LIMITED TO MAXIMUM 125A AT MAXIMUM AMBIENT TEMPERATURE OF 50°C*
2. *MAXIMUM OUTPUT CURRENT OF VSC IN AN OUTDOOR MK 8 VSC VENTILATED CUBICLE IS LIMITED TO MAXIMUM 150.5A AT MAXIMUM AMBIENT TEMPERATURE 45°C*
3. *MAXIMUM OUTPUT CURRENT OF VSC IN THE RANGE 150.6 TO 263A REQUIRES A TEMPERATURE CONTROLLED ENVIRONMENT*

ISSUE	DATE	GRID	REVISION	DRN	REC	APPD
B	01/2024		CFCL SYMBOL REVISED	SAM	TK	EC

DESIGN SURVEY NONE | VERTICAL DATUM NONE | COORDINATE SYS NONE | ASCON SURVEY NONE | DES REF | DES CALC S GILMOUR | DES CHD T LIU | DRN SA MEMORY | Q.C. CHD P HARVEY | NORTH POINT

SUBMITTED 16/06/2023 SA MEMORY (SIGNED) SENIOR TECHNICAL ADVISOR - ELECT

RECOMMENDED 16/06/2023 S GILMOUR (SIGNED) SENIOR ENGINEER - ELECTRICAL

APPROVED 16/06/2023 T LIU (SIGNED) PRINCIPAL ENGINEER - ELECTRICAL

ENGINEERING

WATER CORPORATION

ELECTRICAL STANDARD SWITCHBOARD DESIGNS
SMALL PUMP STATIONS
MOTOR STARTER REFERENCE - WASTEWATER
VARIABLE SPEED CONTROLLER - POWER DIAGRAM - 1.0A TO 263A

FILE | PROJECT | PLAN MN01-22-5.1 | CAD | ISSUE B | ORIGINAL SHEET SIZE A1 | MF

566
810

© THIS DRAWING IS THE PROPERTY OF THE WATER CORPORATION. IT SHALL NOT BE COPIED WITHOUT PERMISSION.

STANDARDS\APPROVED\MN01\PREAPPROVAL\MN01-022-005-01B 17:18 12/01/2024 MEMORYS0/NB46194