DocuSign Envelope ID: 24381753-08F0-4DCD-B103-7A44A7082BFA

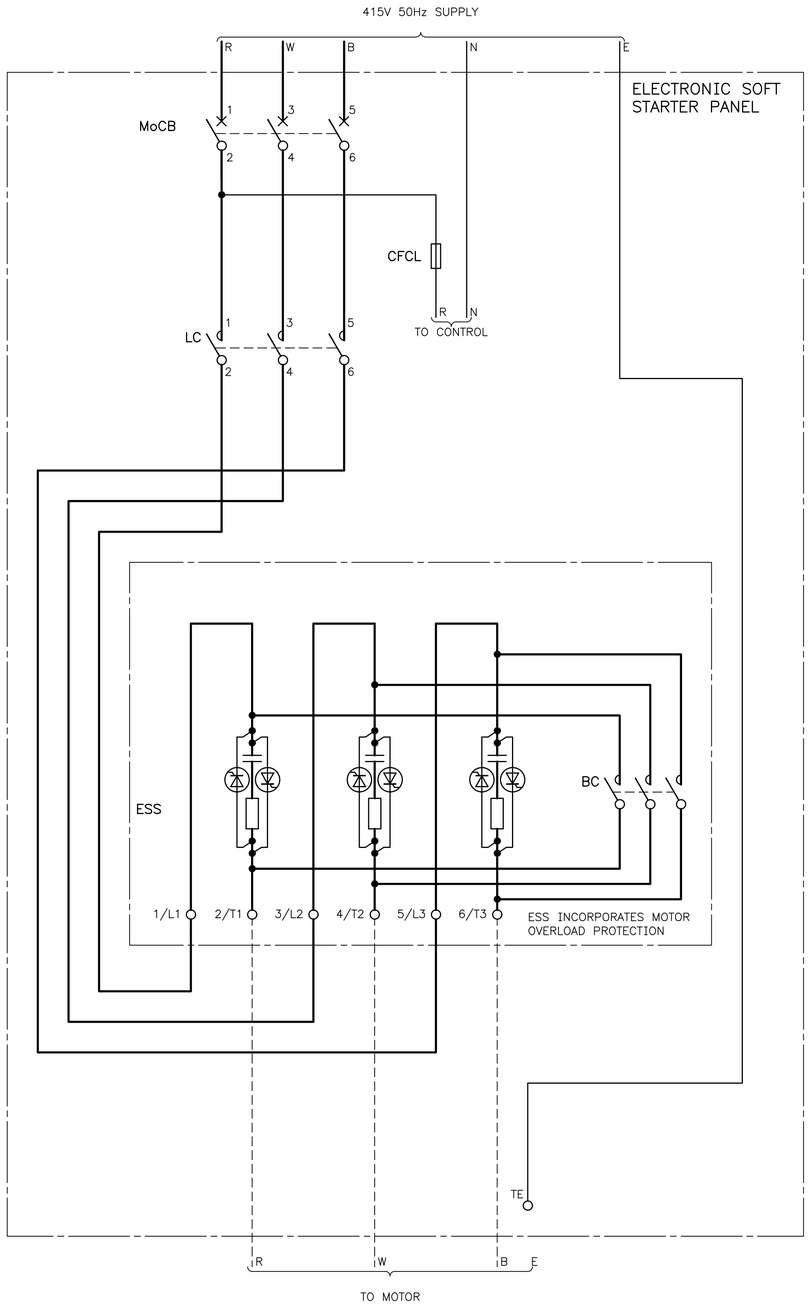

100.1A – 200A

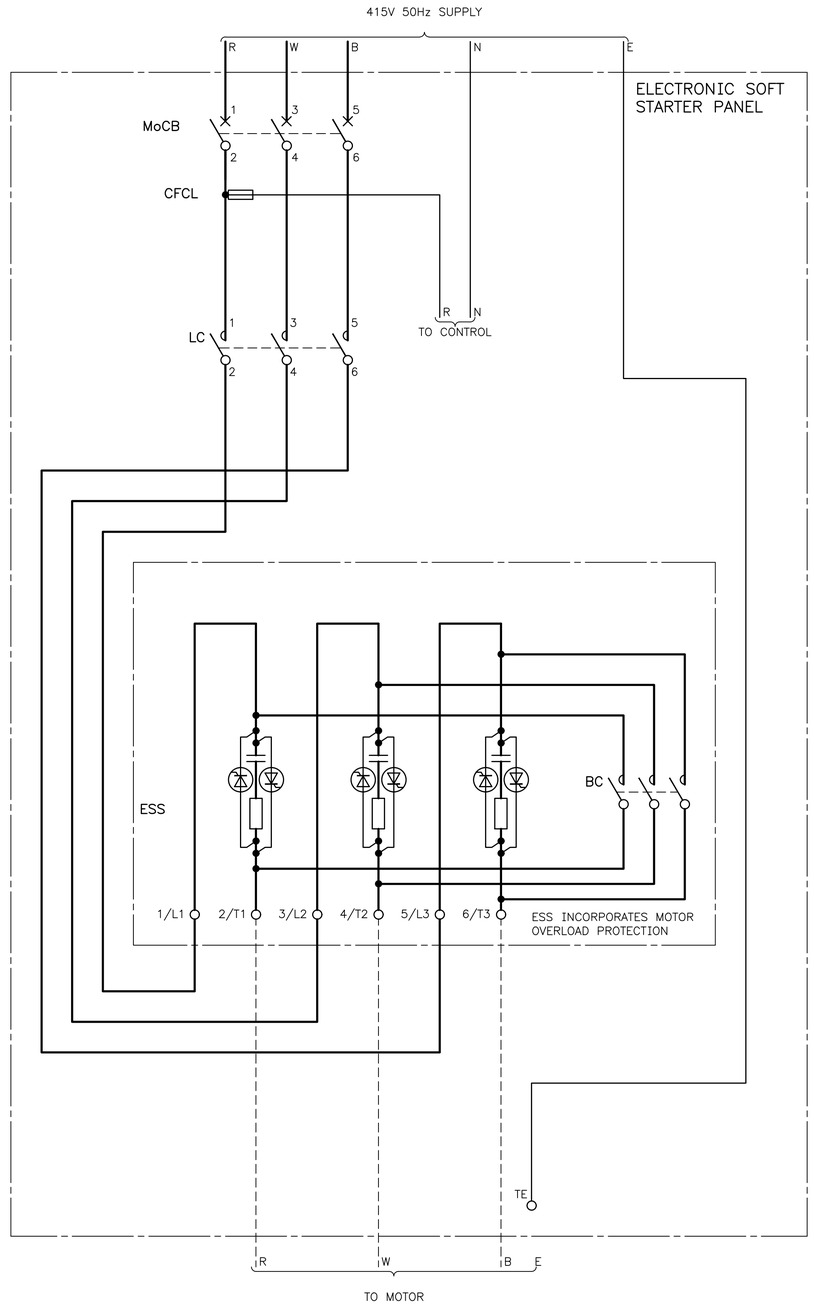

200.1A – 263A

CODE SCHEDULE

BC	BYPASS CONTACTOR
CFCL	CONTROL FAULT CURRENT LIMITER
ESS	ELECTRONIC SOFT STARTER
LC	LINE CONTACTOR
MoCB	MOTOR CIRCUIT BREAKER

ISSUE	DATE	GRID	REVISION	DRN	REC	APPD
E	01/2024		CFCL SYMBOL REVISED (100.1–200A)	SAM	TK	EG
D	03/2021		CURRENT RANGES AND POWER DIAGRAMS REVISED	PH	TL	EG
C	11/2019		POWER DIAGRAMS AND 4TH LINE TITLE REVISED	PH	EG	NJ
B	02/2019		PTPF REVISED	PH	EG	NJ

DESIGN SURVEY NONE
ASCON SURVEY NONE
VERTICAL DATUM NONE
COORDINATE SYS NONE
DES REF
DES CALC E FONG
DES CHD K O'GRADY
DRN P HARVEY
Q.C. CHD S MEMORY
NORTH POINT

ENGINEERING

SUBMITTED 24/07/2017 E FONG (SIGNED) SENIOR ENGINEER – ELECTRICAL
RECOMMENDED 24/07/2017 K O'GRADY (SIGNED) PRINCIPAL ENGINEER – ELECTRICAL
APPROVED 24/07/2017 N JOHNSON (SIGNED) SNR PRINCIPAL ENGINEER – ELECT

WATER CORPORATION

ELECTRICAL STANDARD SWITCHBOARD DESIGNS
SMALL PUMP STATIONS
MOTOR STARTER REFERENCE – WASTEWATER
ELECTRONIC SOFT STARTER POWER DIAGRAM 100.1A – 263A

FILE
PROJECT
PLAN MN01–22–7.2
CAD
ISSUE E
ORIGINAL SHEET SIZE A1
MF

STANDARDS\APPROVED\MN01\PREAPPROVAL\MN01–022–007–02E 17:18 12/01/2024 MEMORYSO/NB46194

© THIS DRAWING IS THE PROPERTY OF THE WATER CORPORATION. IT SHALL NOT BE COPIED WITHOUT PERMISSION.

566
810