DocuSign Envelope ID: 17801A6B-2A60-4CFC-B2C3-1ECB6A53F576

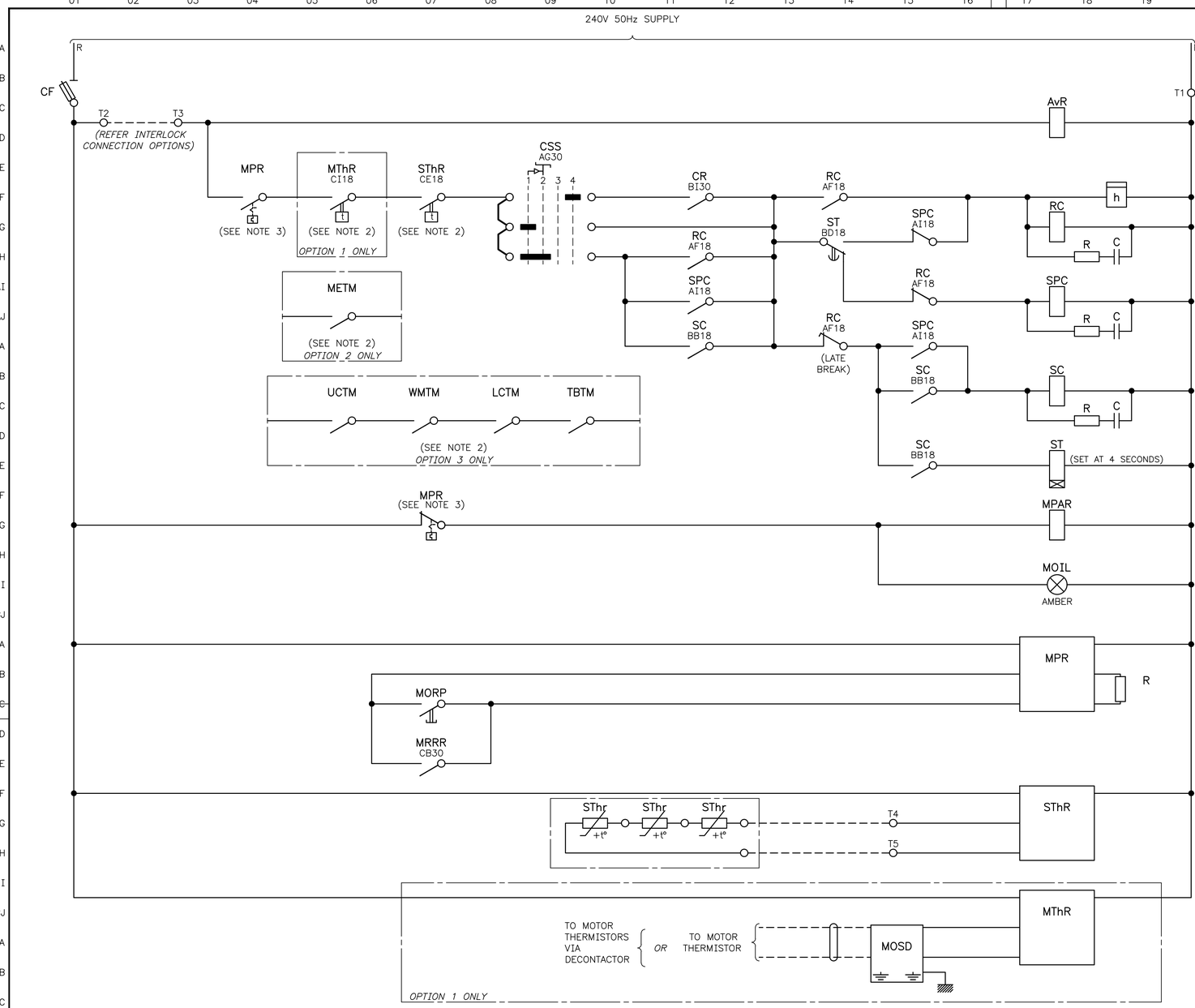


## CODE SCHEDULE

| | |
|---|---|
| AvR | AVAILABLE RELAY |
| C | CAPACITOR |
| CF | CONTROL FUSE |
| CR | CONTROL RELAY |
| CSS | CONTROL SELECTOR SWITCH |
| CSSD | CURRENT SIGNAL SURGE DIVERTER |
| D | DIODE |
| ESpP | EMERGENCY STOP PUSHBUTTON |
| h | HOUR METER |
| LCTM | LOWER CROWN OF WINDING TEMPERATURE MONITOR |
| METM | MOTOR ENCLOSURE TEMPERATURE MONITOR |
| MOIL | MOTOR OVERLOAD FAULT INDICATING LIGHT |
| MORP | MOTOR OVERLOAD FAULT RESET PUSHBUTTON |
| MOSD | MOTOR OVERTEMPERATURE SURGE DIVERTER |
| MPAR | MOTOR PROTECTION AUXILIARY RELAY |
| MPR | MOTOR PROTECTION RELAY |
| MRRR | MOTOR PROTECTION REMOTE RESET RELAY |
| MThR | MOTOR THERMISTOR RELAY |
| PSSD | POWER SIGNAL SURGE DIVERTER |
| R | RESISTOR |
| RC | RUN CONTACTOR |
| SC | START CONTACTOR |
| SPC | STAR POINT CONTACTOR |
| ST | START TIMER |
| SThr | STARTER THERMISTOR |
| SThR | STARTER THERMISTOR RELAY |
| TBTM | THRUST BEARING TEMPERATURE MONITOR |
| UCTM | UPPER CROWN OF WINDING TEMPERATURE MONITOR |
| WMTM | WINDING MOTOR FRAME TEMPERATURE MONITOR |

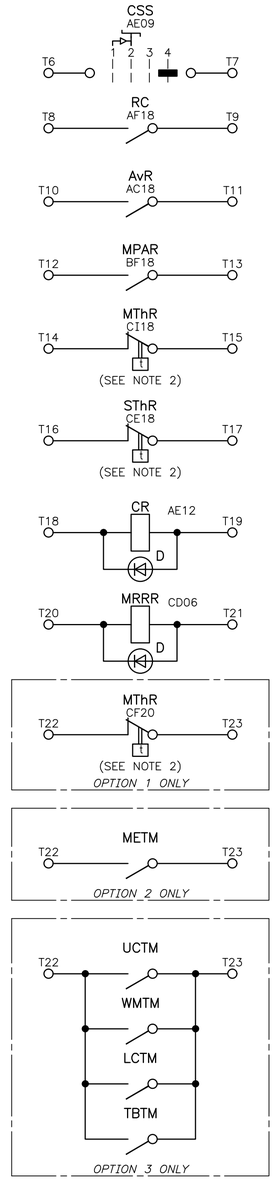


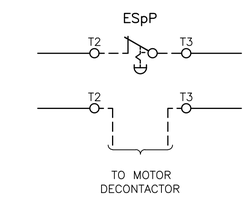


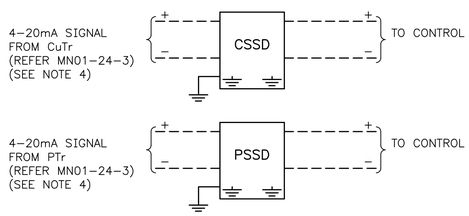


CONTROL INTERCONNECTIONS

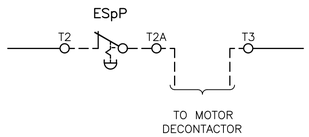


INTERLOCK CONNECTION OPTIONS

*SELECTION DEPENDENT ON APPLICATION*

| CONTROL SELECTOR SWITCH | |
|---|---|
| POSITION | FUNCTION |
| 1 | LOCAL START |
| 2 | LOCAL RUN |
| 3 | OFF |
| 4 | NORMAL |

## OPTION TABLE

| No | DESCRIPTION |
|---|---|
| 1 | MOTOR WITH THERMISTORS |
| 2 | MOTOR WITH 1 RESISTANCE TEMPERATURE DETECTOR *(SEE INSTRUCTIONS FOR USE NOTE 2)* |
| 3 | MOTOR WITH 4 RESISTANCE TEMPERATURE DETECTORS *(SEE INSTRUCTIONS FOR USE NOTE 2)* |

## REFERENCE EXPLANATION

(P)WXYZ
41#1.1#AB34

- PANEL LETTER
- CODE
- HORIZONTAL LOCATION
- VERTICAL LOCATION
- PART Nº (IF REQUIRED)
- SHEET Nº
- BUNDLE Nº

## GENERAL NOTES

1. DRAWN NO POWER CONDITION
2. MOTOR THERMISTOR RELAY AND STARTER THERMISTOR RELAY CONTACTS CHANGE STATE ON ENERGIZATION
3. FOR CONTACTOR MAIN POLES AND MPR COIL REFER TO MN01–24–3.1
4. POWER AND CURRENT SIGNAL SURGE DIVERTERS MAY BE OMITTED WHERE SWITCHBOARD AND CONTROL CUBICLE ARE MOUNTED ON THE SAME CONCRETE SLAB OR WHERE POWER SYSTEM INTERFACE IS USED

## *INSTRUCTIONS FOR USE*

1. *IF THE RTD SENSOR LOCATED WITHIN THE MOTOR ENCLOSURE IS IN A SPECIFIC LOCATION AND ITS LOCATION IS REQUIRED TO BE IDENTIFIED FOR PROJECT PURPOSES. THE METM AND MESD CODES AND DESCRIPTIONS CAN BE RENAMED INLINE WITH CODES AND DESCRIPTIONS ASSIGNED FOR FOUR RTD MOTOR APPLICATIONS. TO BE DETERMINED BY THE PROJECT DESIGNER*
2. *FOR RTD CONNECTION DETAILS REFER TO MN01–24–4.4*

| ISSUE | DATE | GRID | REVISION | DRN | REC | APPD |
|---|---|---|---|---|---|---|
| F | 04/2023 | | PROTECTION OPTIONS REVISED | PH | AV | WEG |
| E | 01/2022 | | MThR AND SThR CONTACTS ADDED TO PRIMARY PROTECTION | PH | AE | EG |
| D | 03/2021 | | AvR CONTROL WIRING REVISED | PH | TL | EG |
| C | 10/2020 | | AvR CONTROL WIRING REVISED | PH | EG | NJ |
| B | 11/2019 | | 4TH LINE TITLE AND NOTE 3 REVISED | PH | EG | NJ |

| | | | |
|---|---|---|---|
| DESIGN SURVEY NONE | VERTICAL DATUM NONE | DES CALC T LIU | NORTH POINT |
| | COORDINATE SYS NONE | DES CHD E GLIWSKI | |
| ASCON SURVEY NONE | DES REF | DRN P HARVEY | |
| | | Q.C. CHD S MEMORY | |

SUBMITTED 26/02/2019
T LIU (SIGNED)
SENIOR ENGINEER – ELECTRICAL

RECOMMENDED 26/02/2019
E GLIWSKI (SIGNED)
PRINCIPAL ENGINEER – ELECTRICAL

APPROVED 26/02/2019
N JOHNSON (SIGNED)
SNR PRINCIPAL ENGINEER – ELECT

**ENGINEERING**

WATER CORPORATION

ELECTRICAL STANDARD SWITCHBOARD DESIGNS
SMALL PUMP STATIONS
MOTOR STARTER REFERENCE – BORE
ATr STARTER – CONTROL DIAGRAM 45.1A – 100A

FILE
PROJECT
PLAN MN01–24–4.2
CAD
ISSUE F
ORIGINAL SHEET SIZE A1
MF

© THIS DRAWING IS THE PROPERTY OF THE WATER CORPORATION. IT SHALL NOT BE COPIED WITHOUT PERMISSION.

STANDARDS\APPROVED\MN01\MN01–024–004–02F 13:58 06/04/2023 HARVEYPO/NB46193

566
810