DocuSign Envelope ID: D02654E8-1738-4B59-B551-4B2FDB7E3BF1

240V 50Hz SUPPLY CONTINUED FROM PART 2

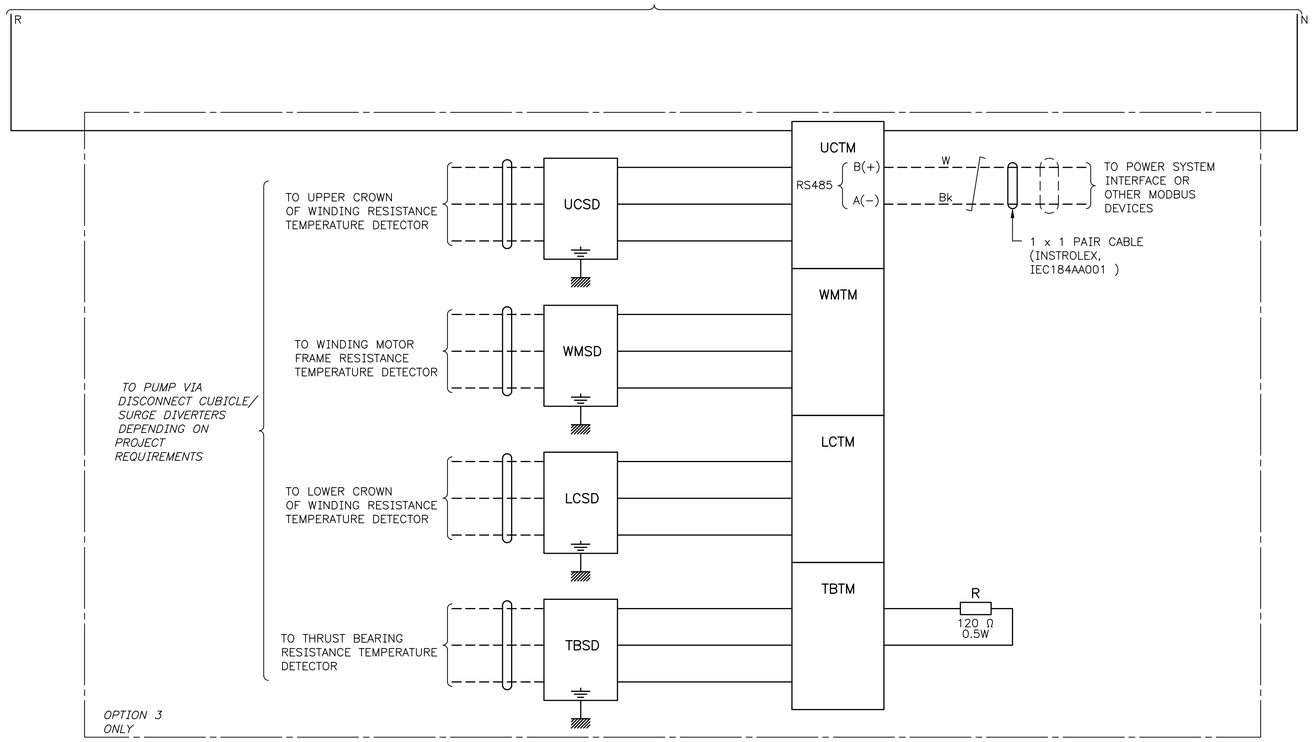

CODE SCHEDULE

LCSD	LOWER CROWN OF WINDING TEMPERATURE SURGE DIVERTER
LCTM	LOWER CROWN OF WINDING TEMPERATURE MONITOR
R	RESISTOR
TBSD	THRUST BEARING TEMPERATURE SURGE DIVERTER
TBTM	THRUST BEARING TEMPERATURE MONITOR
UCSD	UPPER CROWN OF WINDING TEMPERATURE SURGE DIVERTER
UCTM	UPPER CROWN OF WINDING TEMPERATURE MONITOR
WMSD	WINDING MOTOR FRAME TEMPERTURE SURGE DIVERTER
WMTM	WINDING MOTOR FRAME TEMPERATURE MONITOR

RTD PARAMETERS

PARAMETER	DESCRIPTION	SETTING	COMMENTS
INITIAL SETTING LEVEL			
iN−t	INPUT TYPE	1 (Pt100)	−199.9 TO 500 ° C
d−U	TEMPEARTURE INPUT UNIT	C	
oREV	DIRECT/REVERSE OPERATION	oR−D (DIRECT)	OUTPUT TURNS ON IF TEMP GREATER THAN SET POINT
CNtL	CONTROL METHOD	oNoF	ON/OFF CONTROL (DEFAULT)
ALT1	ALARM TYPE 1	8	ABSOLUTE VALUE UPPER−LIMIT
PV/SP	SET POINT	** (° C)	−1999 TO 9999 EU *SET AT 105% OF MOTOR MANUFACTURERS RECOMENDED SETTING*
AL−1	ALARM VALUE 1	** (° C)	−1999 TO 9999 EU *SET AT 105% OF MOTOR MANUFACTURERS RECOMENDED SETTING*
ALH1	ALARM 1 HYSTERESIS	** °C	0.1 TO 999.9 *SET AT 80% OF MOTOR MANUFACTURERS RECOMENDED SETTING*
A1oF	ALARM 1 OFF DELAY	** (SECONDS)	0 TO 999
ADVANCED SETTING LEVEL			
oUT 1	CONTROL OUTPUT 1	ALM1	ALARM 1 (NORMALLY OPEN (N/O) CLOSE IN ALARM)
SUb 1	AUXILIARY OUTPUT 1 ASSIGNMENT	ALM1	ALARM 1
Sb1N	AUXILIARY OUTPUT 1 OPEN IN ALARM	N−C	NORMALLY CLOSED (N/C) OPEN IN ALARM
COMMUNICATIONS SETTING LEVEL			
PSEL	PROTOCOL	Mod	MODBUS
U−No	COMMUNICATIONS UNIT No	**	0 TO 99
bPS	COMMUNICATIONS BAUD RATE	** kbps	9.6, 19.2, 38.4 OR 57.6
SPoS	SP OFFSET	−199.9 TO 999	

OPTION TABLE

No	DESCRIPTION
1	MOTOR WITH THERMISTORS
2	MOTOR WITH ONE RESISTANCE TEMPERATURE DETECTOR
3	MOTOR WITH FOUR RESISTANCE TEMPERATURE DETECTORS

GENERAL NOTES

1. DRAWN NO POWER CONDITION
2. MOTOR THERMISTOR RELAY CONTACTS CHANGE STATE ON ENERGIZATION
3. MOTOR CONTROL CONTACTS UCTM, WMTM, LCTM, TBTM CHANGE STATE ON ENERGIZATION
4. CONTROL INTERCONNECTION CONTACTS UCTM, WMTM, LCTM, TBTM DO NOT CHANGE STATE ON ENERGIZATION

REFERENCE EXPLANATION

(P)WXYZ
41#1.1#AB34

- PANEL LETTER
- CODE
- HORIZONTAL LOCATION
- VERTICAL LOCATION
- PART N° (IF REQUIRED)
- SHEET N°
- BUNDLE N°

ISSUE	DATE	GRID	REVISION	DRN	REC	APPD

DESIGN SURVEY NONE | VERTICAL DATUM NONE | COORDINATE SYS NONE | ASCON SURVEY NONE | DES REF

DES CALC S GILMOUR | DES CHD T LIU | DRN SA MEMORY | Q.C. CHD P HARVEY

NORTH POINT

SUBMITTED 16/06/2023 SA MEMORY (SIGNED) SENIOR TECHNICAL ADVISOR – ELECT

RECOMMENDED 16/06/2023 S GILMOUR (SIGNED) SENIOR ENGINEER – ELECTRICAL

APPROVED 6/06/2023 T LIU (SIGNED) PRINCIPAL ENGINEER – ELECTRICAL

ENGINEERING

WATER CORPORATION

ELECTRICAL STANDARD SWITCHBOARD DESIGNS
SMALL PUMP STATIONS
MOTOR STARTER REFERENCE – BORE
VARIABLE SPEED CONTROLLER – CONTROL DIAGRAM – PART 3

FILE | PROJECT | PLAN MN01−24−6.3 | CAD | ISSUE A | ORIGINAL SHEET SIZE A1 | MF

566
810

© THIS DRAWING IS THE PROPERTY OF THE WATER CORPORATION. IT SHALL NOT BE COPIED WITHOUT PERMISSION.

STANDARDS\APPROVED\MN01\MN01−024−006−03A 10:42 16/06/2023 MEMORYSO/NB46194