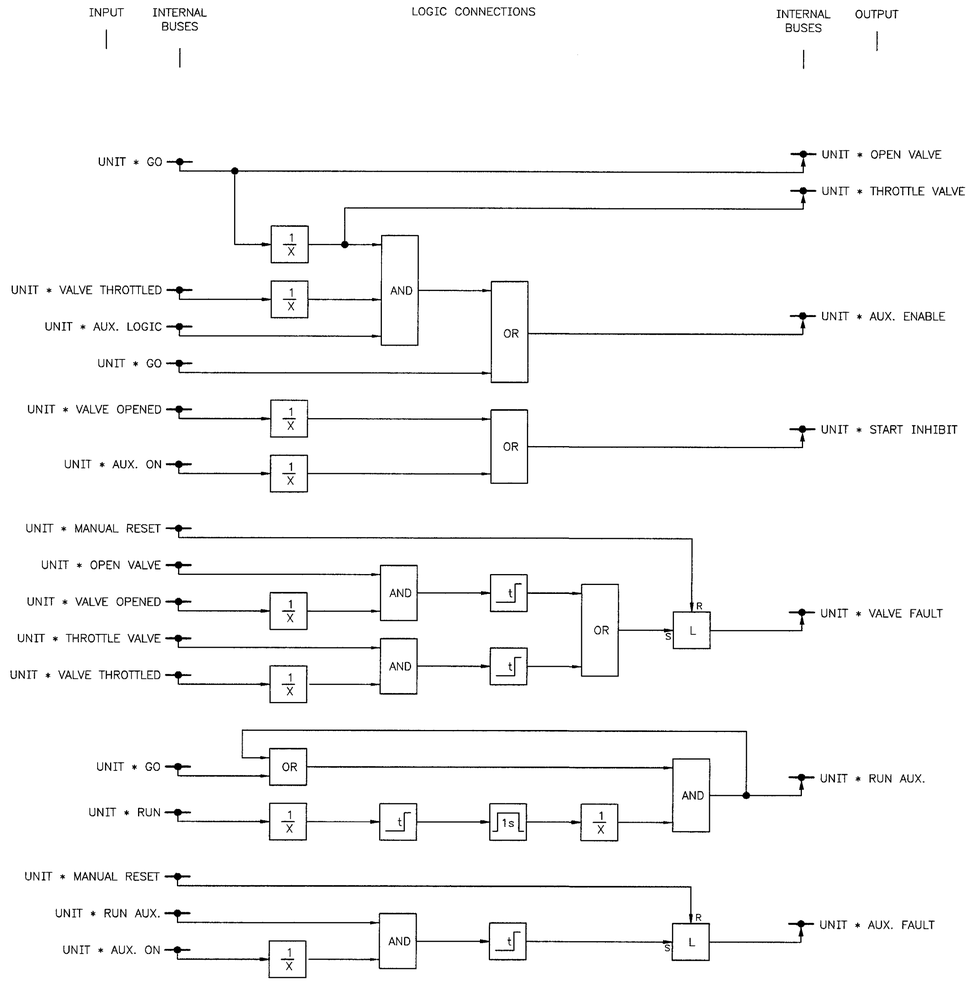

MODULE INTERNAL LOGIC

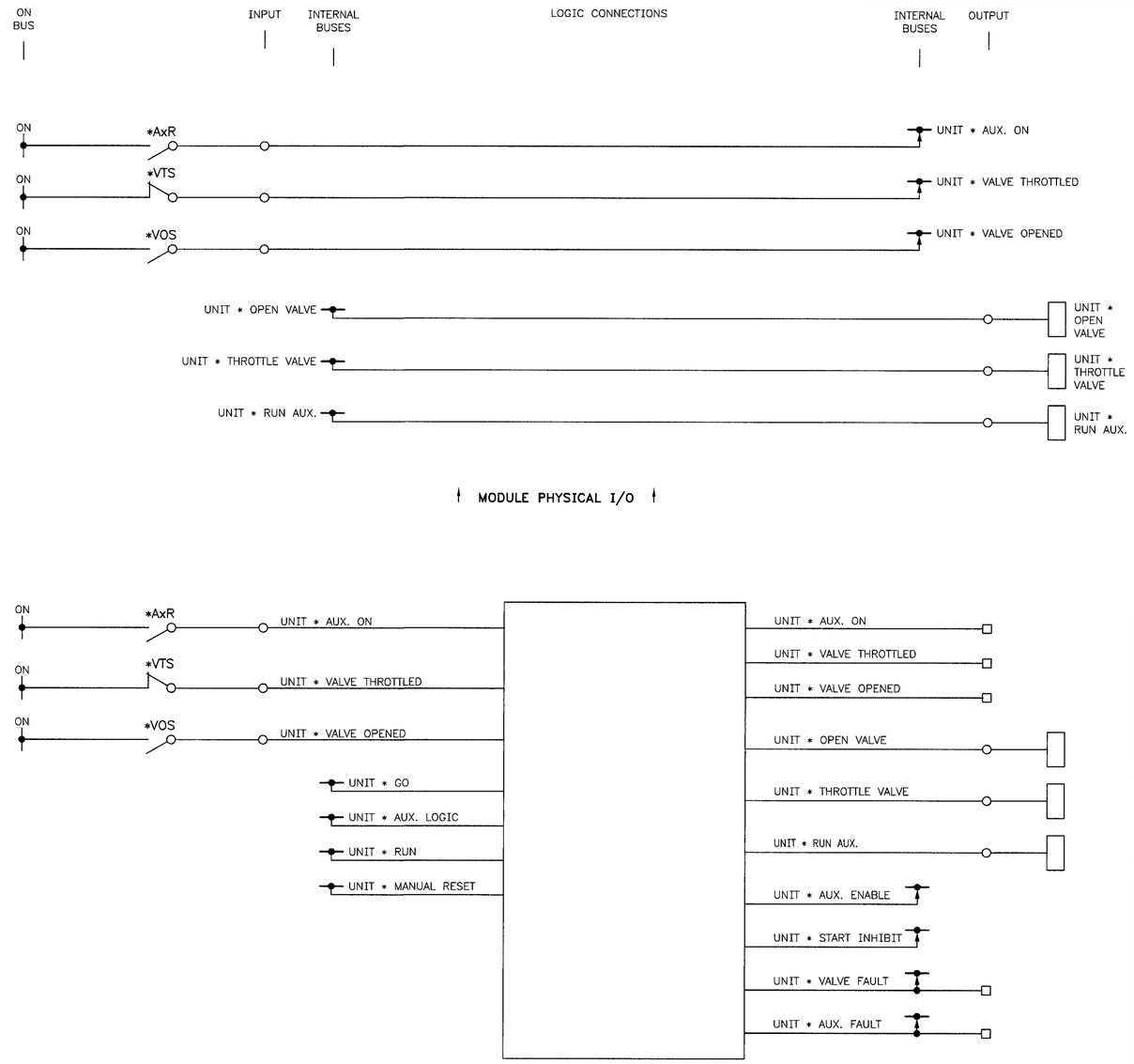

MODULE PHYSICAL I/O

MODULE EXTERNAL CONNECTIONS

GENERAL NOTES

1. DRAWN WITH THE VALVE THROTTLED, AUXILIARY PLANT OFF AND PUMP SHUT DOWN
2. THE VALVE CONTROL LOGIC INCLUDED IN THIS LOGIC MODULE IS INTENDED TO CONTROL A DELIVERY VALVE CONNECTED TO A SINGLE PUMP. IT IS NOT INTENDED TO CONTROL INDEPENDENTLY-OPERATED VALVES. THE PURPOSE OF THIS LOGIC IS TO THROTTLE THE VALVE PRIOR TO SHUTTING DOWN THE PUMP, SO AS TO REDUCE WATER HAMMER. THE PUMP WILL START AGAINST AN OPEN VALVE, BUT WILL NOT SHUT DOWN UNTIL THE DELIVERY VALVE HAS BEEN MOVED INTO THE THROTTLED POSITION. THE DELIVERY VALVE MUST NOT BE THROTTLED SO MUCH THAT THE NO FLOW SWITCH OPERATES
3. THE AUXILIARY LOGIC INCLUDED IN THIS LOGIC MODULE IS INTENDED TO CONTROL AUXILIARY PLANT ASSOCIATED WITH A SINGLE PUMP. IT IS NOT INTENDED TO CONTROL INDEPENDENTLY-OPERATED PLANT. THE PURPOSE OF THIS LOGIC IS TO START THE AUXILIARY PLANT PRIOR TO STARTING THE PUMP AND TO RUN THE AUXILIARY PLANT UNTIL THE PUMP HAS BEEN SHUT DOWN

CODE SCHEDULE

AxR	AUXILIARY RELAY
VOS	VALVE OPENED SWITCH
VTS	VALVE THROTTLED SWITCH

LEGEND

- ☐ SCADA AND LOCAL OPERATOR DISPLAY I/O
- ○ PHYSICAL TERMINAL

ISSUE	DATE	GRID	REVISION	DRN	REC	APPD
B	03/2003		NOTES 2 AND 3 REVISED; UNIT * MANUAL RESET INTERNAL BUSES RELOCATED			

SURVEY BOOKS | VERTICAL DATUM NONE | COORDINATE SYS NONE | DES REF | DES CALC | DES CHD KOG | DRN TJT | Q.C. CHD HdeV | NORTH POINT

CWS
ELECTRICAL & MECHANICAL ENGINEERING
ELECTRICAL DESIGN & STANDARDS DEVELOPMENT
37 Lemnos Street
Shenton Park WA 6008
Telephone : (08) 9380 7452
Mobile : 0419 967 520
PO Box 230
Wembley WA 6014
Facsimile : (08) 9380 7570

RECOMMENDED 21/08/2001
R PRITCHARD (SIGNED)
PRINCIPAL RGP ENG

RECOMMENDED 24/08/2001
N H JOHNSON (SIGNED)
SUPERVISING ELECTRICAL ENGINEER, IDB

APPROVED 24/08/2001
A KLITA (SIGNED)
PRINCIPAL ENGINEER, IDB

WATER CORPORATION

ELECTRICAL STANDARD DRAWING
MAJOR PUMP STATION
STANDARD LOGIC DIAGRAM
UNIT AUXILIARIES MODULE

FILE | PLAN | CAD | ISSUE
PROJECT | FS00-2-7 | B

ORIGINAL SHEET SIZE A1

MF 23/7/03

© THIS DRAWING IS THE PROPERTY OF THE WATER CORPORATION. IT SHALL NOT BE COPIED WITHOUT PERMISSION.

CWS DESIGN\PROJECTS\D03027W\CAD\FS00\FS00002007 01B 07:32 07/07/2003 TRAINOTO/WSNT-N08408

566
810