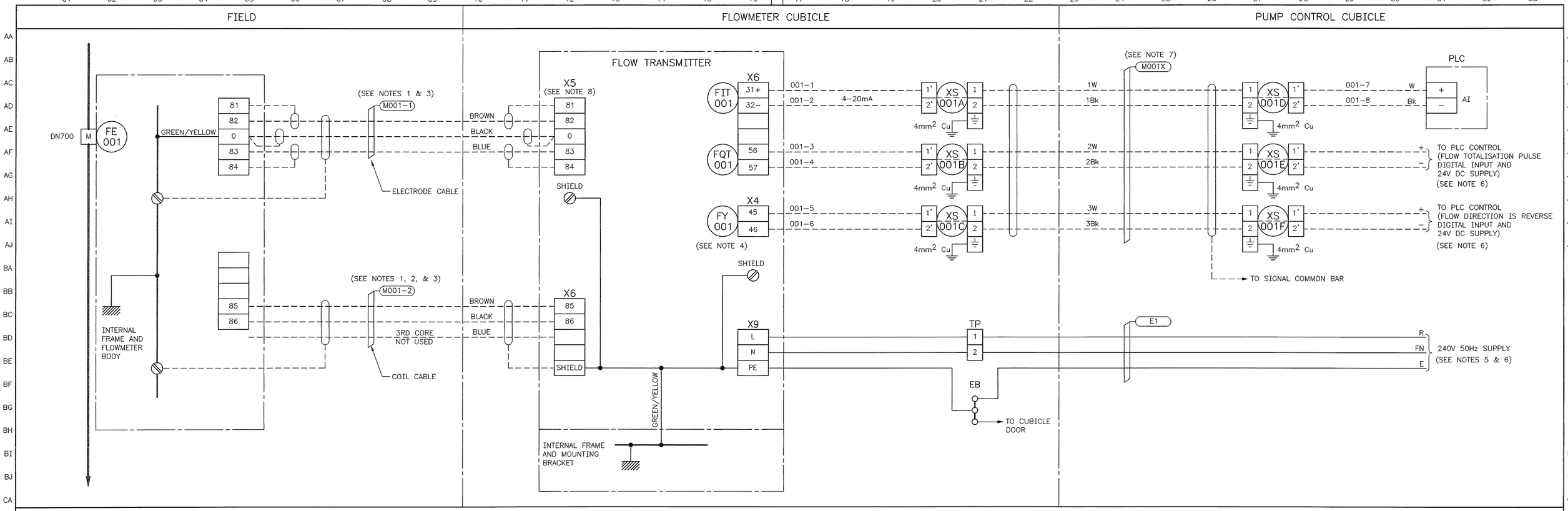

INSTRUMENT SCHEDULE

TAG NUMBER	DEVICE DESCRIPTION/FUNCTION	INPUT RANGE VALUES	OUTPUT RANGE VALUES	RESISTANCE (ohms)	CONTACTS N/O	CONTACTS N/C	POWER SUPPLY V,DC/Hz	MANUFACTURER	MODEL No.	REMARKS
FE001	MAGNETIC FLOWMETER	0–130ML/DAY	FIT001	–	–	–		SIEMENS	DN700 MAG 5100W/MAG 6000 COMPACT	PN16 (AS4087), COMPOSITE ELASTOMER LINING IP68 SUBMERSIBLE KIT
FIT001	FLOW TRANSMITTER	FE001	4–20mA	–	–	–	240V 50Hz			
FQT001	FLOW TOTAL TRANSMITTER	1000L	1 PULSE	–	–	–				
FY001	FLOW REVERSE DIRECTION RELAY	–	–	–	–	1	24V DC			
XS001A	SURGE DIVERTER	4–20mA	4–20mA	1	–	–	LOOP	CRITEC	UTB–30SP	
XS001B	SURGE DIVERTER	–	–	–	–	–	–	CRITEC	UTB–30SP	
XS001C	SURGE DIVERTER	–	–	–	–	–	–	CRITEC	UTB–30SP	
XS001D	SURGE DIVERTER	4–20mA	4–20mA	1	–	–	LOOP	CRITEC	UTB–30SP	
XS001E	SURGE DIVERTER	–	–	–	–	–	–	CRITEC	UTB–30SP	
XS001F	SURGE DIVERTER	–	–	–	–	–	–	CRITEC	UTB–30SP	

CODE SCHEDULE

PLC	PROGRAMMABLE LOGIC CONTROLLER

REFERENCE EXPLANATION

(P)WXYZ
41#1.1#AB34

- PANEL LETTER
- CODE
- HORIZONTAL LOCATION
- VERTICAL LOCATION
- PART Nº (IF REQUIRED)
- SHEET Nº
- BUNDLE Nº

GENERAL NOTES

1. VENDOR SUPPLIED CABLE
2. SPECIAL CABLE WITH DOUBLE SCREEN (SIEMENS, FDK083F30**). ** IS DEPENDENT ON CABLE LENGTH
3. FOR MAXIMUM ROUTE LENGTH OF CABLE REFER DS25, SECTION 3.3.2.2
4. FLOW REVERSE DIRECTION RELAY (WHERE REQUIRED)
5. DRAWN FOR 240V 50Hz POWER SUPPLY TO THE TRANSMITTER. THE DESIGNER SHALL INCLUDE THE APPROPRIATE DESIGN EQUIPMENT IF THE REQUIRED POWER SUPPLY IS 24V DC AND BATTERY BACKUP FOR THE FLOWMETER IS REQUIRED
6. DESIGNER TO ADD CORRECT DRAWING REFERENCE
7. DRAWN FOR ROUTE LENGTH CABLE OF MORE THAN 15m. REFER DS25, SECTION 2.7.3.3 FOR REQUIREMENTS
8. THE ELECTRODE CABLE SCREENS ARE CONNECTED TO THE BODY OF THE FLOWMETER HEAD AT THE FLOWMETER HEAD END ONLY. X5 TERMINALS 81, 0 AND 84 ARE NOT EARTHED BUT ARE CAPACITIVELY COUPLED INTERNALLY FOR RF SUPPRESSION PURPOSES

ISSUE	DATE	GRID	REVISION	DRN	REC	APPD
B	11/2008		LINK REMOVED FROM X5, NOTE 8 ADDED			

DESIGN SURVEY NONE | VERTICAL DATUM NONE | COORDINATE SYS NONE | ASCON SURVEY NONE | DES REF | DES CALC V FARAH | DES CHD A WITKOWSKI | DRN S A MEMORY | Q.C. CHD H de VRIES | NORTH POINT

EMS Design
INFRASTRUCTURE DESIGN BRANCH
ELECTRICAL, MECHANICAL AND SCADA DESIGN
37 Lemnos Street, Shenton Park WA 6008, Telephone : (08) 9380 7452
PO Box 100, LEEDERVILLE WA 6902, Facsimile : (08) 9380 7570

RECOMMENDED 20/10/2008
A WITKOWSKI (SIGNED)
PRINCIPAL SCADA ENGINEER, IDB

APPROVED 20/10/2008
M PEARSE (SIGNED)
PRINCIPAL ENGINEER, IDB

WATER CORPORATION

ELECTRICAL STANDARD DRAWING
MAJOR PUMP STATION
LOOP DIAGRAM
FLOW (FIT001)

FILE | PLAN FS00–9–1 | CAD | ISSUE B | PROJECT

ORIGINAL SHEET SIZE A1

MF 27/11/08

566
810

© THIS DRAWING IS THE PROPERTY OF THE WATER CORPORATION. IT SHALL NOT BE COPIED WITHOUT PERMISSION.

EMS DESIGN\PROJECTS 2004\D04223W\CAD\FS00\FS00-009-001-01B 17:27 24/11/2008 MEMORYSO/WS17779