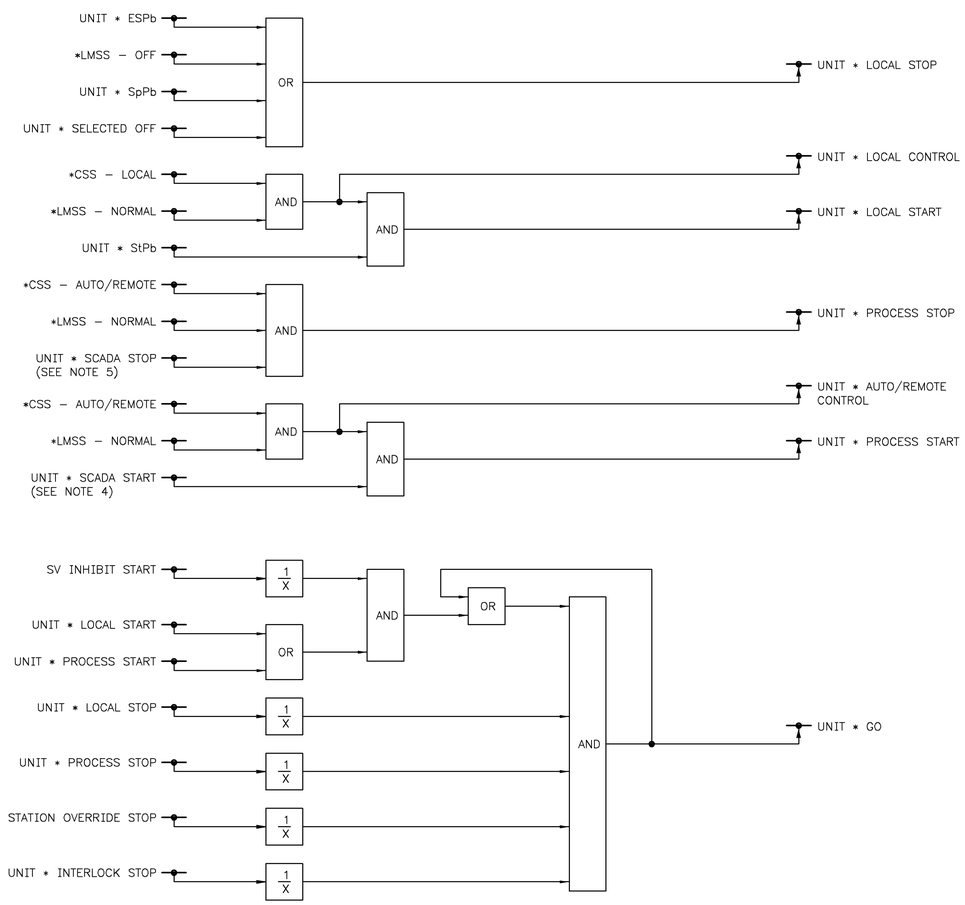

MODULE INTERNAL LOGIC

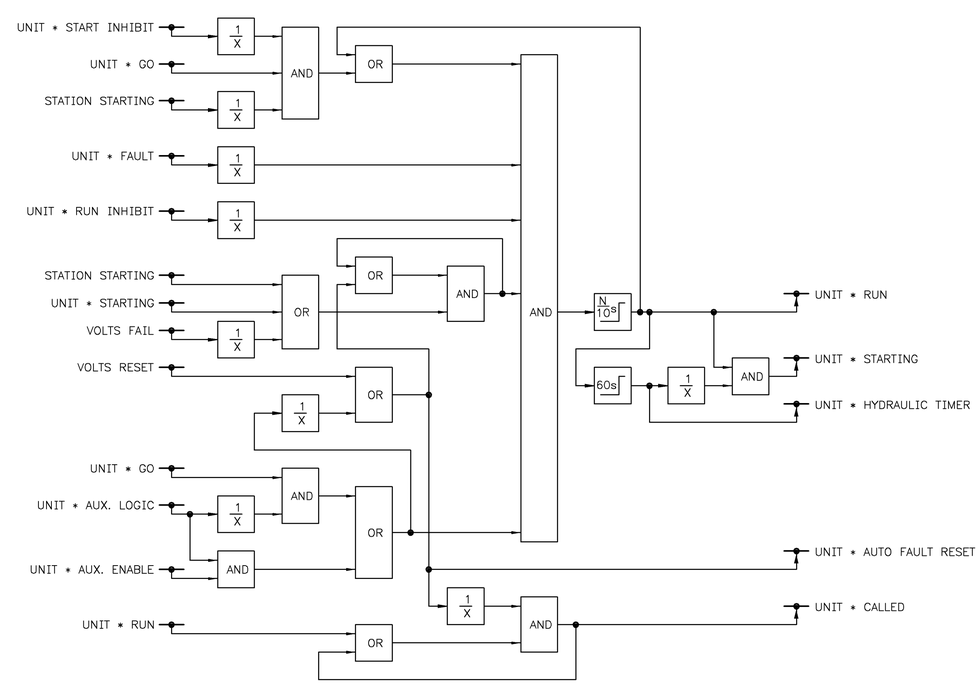

MODULE INTERNAL LOGIC (CONTINUED)

GENERAL NOTES

1. REMOTE CONTROL MUST GENERATE SEPARATE START AND STOP SIGNALS. SCADA START SIGNAL CAN BE MAINTAINED BUT NEED NOT BE SO. HOWEVER IF THE REMOTE START SIGNAL IS NOT MAINTAINED, A NEW START SIGNAL MUST BE TRANSMITTED AFTER A POWER FAILURE
2. *CSS AND *LMSS LOCATED ON UNIT * PANEL ON MAIN SWITCHBOARD
3. N = PUMPING UNIT NUMBER
4. ALTERNATIVELY INPUT MAY BE "UNIT * AUTO START"
5. ALTERNATIVELY INPUT MAY BE "UNIT * AUTO STOP"

CODE SCHEDULE

CSS	CONTROL SELECTOR SWITCH
ESPb	EMERGENCY STOP PUSHBUTTON
LMSS	LOCAL MODE SELECTOR SWITCH
SpPb	STOP PUSHBUTTON
StPb	START PUSHBUTTON

LEGEND

□ SCADA AND LOCAL OPERATOR DISPLAY I/O

○ PHYSICAL TERMINAL

ISSUE	DATE	GRID	REVISION	DRN	REC	APPD
E	06/2004		UNIT RUN LOGIC REVISED	AA	RGP	NHJ
D	02/2003		'AUTO/REMOTE' AND 'PROCESS' WERE 'REMOTE'; NOTES 4 AND 5 ADDED	TJT	RP	NHJ
C	11/2002		MODULE INTERNAL LOGIC REVISED	TJT	RP	NHJ
B	10/2001		VOLTS FAIL INPUT WAS VOLTS HEALTHY	AA	RP	NHJ

SURVEY BOOKS

VERTICAL DATUM NONE
COORDINATE SYS NONE
DES REF

DES CALC
DES CHD KOG
DRN TJT
Q.C. CHD HdeV

NORTH POINT

CWS
ELECTRICAL & MECHANICAL ENGINEERING
ELECTRICAL DESIGN & STANDARDS DEVELOPMENT
37 Lemnos Street
Shenton Park WA 6008
Telephone : (08) 9380 7452
Mobile : 0419 967 520
PO Box 230
Wembley WA 6014
Facsimile : (08) 9380 7570

RECOMMENDED 21/08/2001
R PRITCHARD (SIGNED)
PRINCIPAL RGP ENG

RECOMMENDED 24/08/2001
N H JOHNSON (SIGNED)
SUPERVISING ELECTRICAL ENGINEER, IDB

APPROVED 24/08/2001
A KLITA (SIGNED)
PRINCIPAL ENGINEER, IDB

WATER CORPORATION

ELECTRICAL STANDARD DRAWING
MAJOR PUMP STATION
STANDARD LOGIC DIAGRAM
UNIT STOP/START MODULE – PART 1

FILE
PROJECT
PLAN FS00–2–3.1
CAD
ISSUE E
ORIGINAL SHEET SIZE A1
MF

CWS DESIGN\PROJECTS\D04223W\CAD\FS00\FS0000200301E 01/07/2004

© THIS DRAWING IS THE PROPERTY OF THE WATER CORPORATION. IT SHALL NOT BE COPIED WITHOUT PERMISSION.

566
810