DocuSign Envelope ID: EB24E9B7-B207-4FD4-856E-BDF75714A589

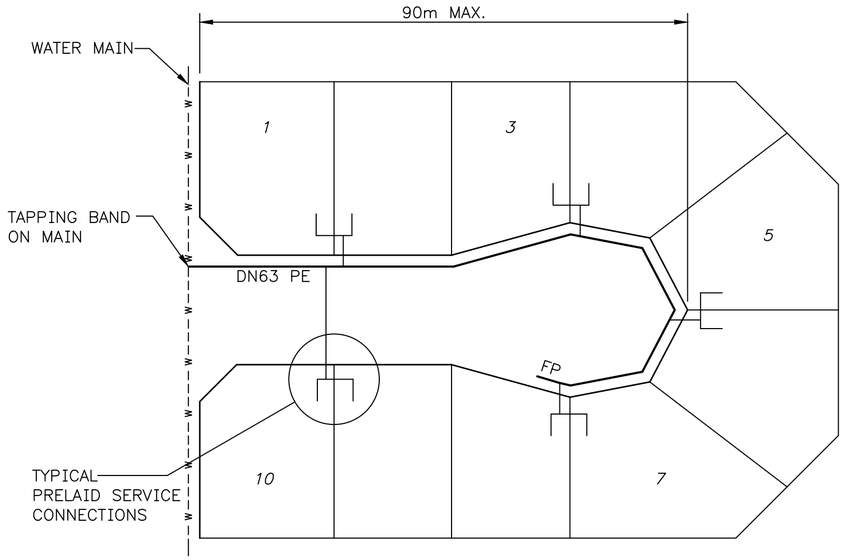

TYPICAL PLAN OF TYPE A INSTALLATION
(UP TO 10 SERVICES)

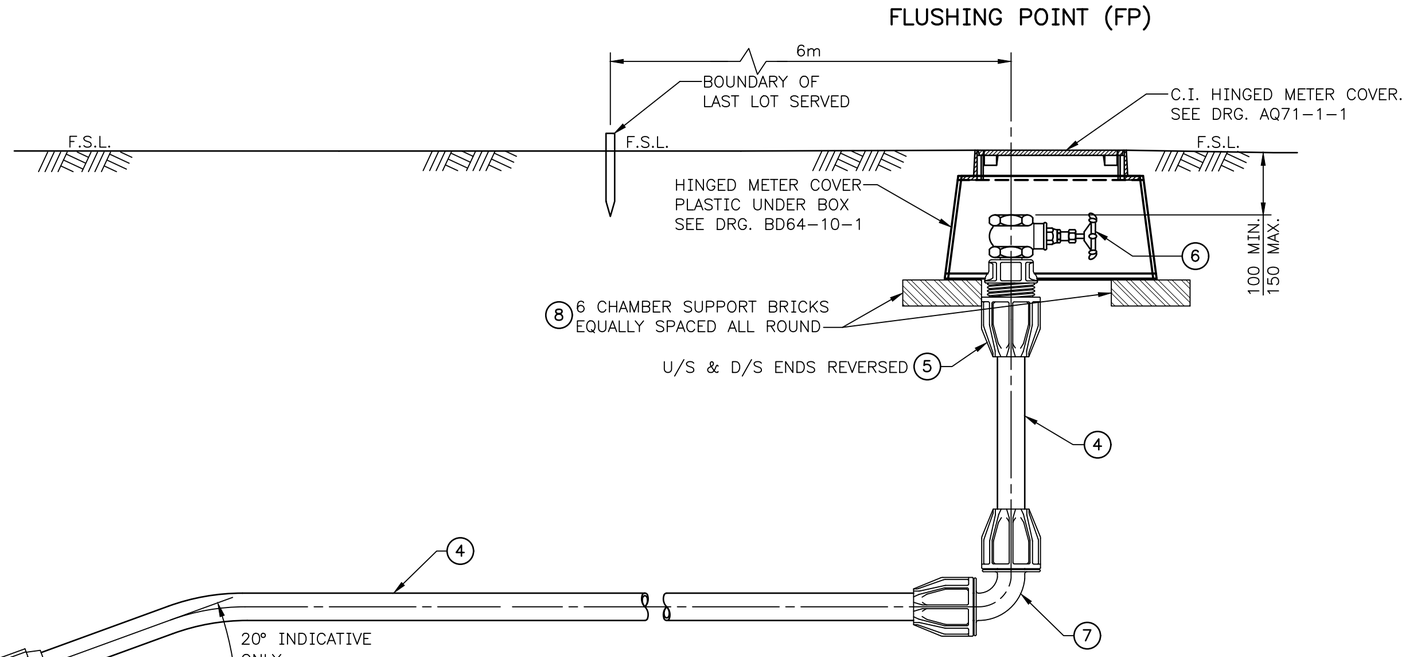

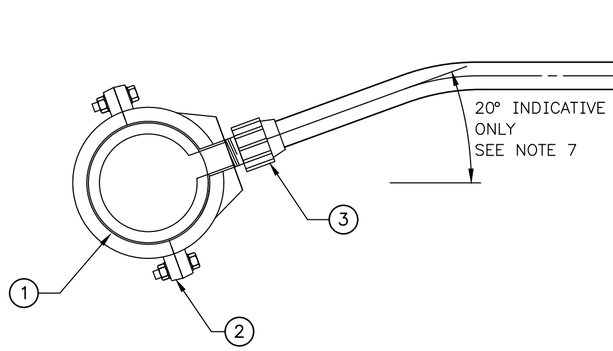

GENERAL ARRANGEMENT
(SERVICE CONNECTIONS NOT SHOWN)

TABLE OF MATERIALS AND STANDARDS

MARK	PIPE/FITTING DESCRIPTION	MATERIAL	UPSTREAM END	DOWNSTREAM END	STANDARD	MMR
8	230x115x75 Solid Brick	Fire Clay	N/A	N/A	AS1617	2222
7	DN63 PE 90° Elbow	PP	DN63 PE c/w O Ring Seal	DN63 PE c/w O Ring Seal	AS/NZS4129	13990
6	DN50 Gate Valve c/w CI Handwheel	Copper Alloy	RP 2/50	RP 2/50	SPS 255	1813
5	DN63 PE End Connector/Adaptor	PP	DN63 PE c/w O Ring Seal	R 2/50	AS/NZS4129	13989
4	DN63 Polyethylene Pipe	PE100 (NOTE 2)	#N/A	#N/A	AS/NZS4130	22800
3	DN63 PE Adaptor/End Connector	PP	R 1½ /40	DN63 PE c/w O Ring Seal	AS/NZS4129	13988
2	Tapping Band tapped DN40	To suit pipe	#N/A	RP 1½ /40	DS63 Table 3.1	–
1	Reticulation Watermain	PVC/MS/CI/DI/AC/CU	#N/A	#N/A	DS63 Table 3.1	–

NOTES:

1. MINIMUM PIPELINE COVER REQUIREMENTS SHALL BE ACHIEVED, INSOFAR AS IS PRACTICABLE, BY DEFLECTING THE PE PIPE DOWNWARDS FROM THE TAPPING POINT. SUBJECT TO THE PIPE MANUFACTURERS RECOMMENDED MAXIMUM PIPE CURVATURE.
2. PE PIPE SHALL:
   (a) HAVE AN SDR OF 9 OR LOWER;
   (b) BE DISINFECTION RESISTANT AS DEFINED IN SPS125;
   (c) BE HSCR AS PER PIPA POP016;
   (d) COMPLY WITH AS 4130; AND
   (e) BE MANUFACTURED FROM A RESIN LISTED IN THE STRATEGIC PRODUCT REGISTER.
3. THREADED PIPE FITTING ENDS SHALL BE SERIES R (EXTERNALLY THREADED AND SERIES RP (INTERNALLY THREADED) TO AS ISO 7.1
4. COPPER ALLOY GATE VALVES SHALL BE TO WATER CORPORATION SPECIFICATION SPS 255.
5. SLUICE VALVE, HYDRANT, METER AND STOP TAP SERVICE CHAMBERS SHALL BE SUPPORTED ON A LEVEL BED OF BRICKS WHICH HAVE BEEN FIRMLY SET ON AND INTO WELL COMPACTED FILL.
6. WELL COMPACTED FILL SHALL PROVIDE A FILL PENETRATION RESISTANCE.
   (a) OF AT LEAST 7 BLOWS PER 300mm OF PENETRATION, WHEN TESTED IN ACCORDANCE WITH AS1289.6.3.3, FOR SAND OR
   (b) EQUIVALENT TO 92% MODIFIED DRY DENSITY, WHEN TESTED IN ACCORDANCE WITH AS1289.5.4.1, FOR GRAVEL.
7. INSTALL PE SERVICE PIPE AT ANGLE TO ACHIEVE MINIMUM 150mm CLEARANCE FROM OTHER UTILITIES.
8. PIPE FITTINGS JOINING PE PIPE SHALL BE TO AS/NZS4129.

ISSUE	DATE	GRID	REVISION	DRN	REC	APPD
I	05/2021		MARK 4 IN TABLE AND NOTE 2 AMENDED. NOTE 8 ADDED.	ME	AA	JD
H	09/2017		SCALE OF DETAILS AMENDED, PLASTIC UNDERBOX ADDED, ITEM 8 ADDED	BJ	CW	CW
G	09/2012		NOTES AND TABLE AMENDED	BJ	CW	KR
F	01/2004		GATE VALVE REMOVED & WATER MAIN CONN & NOTES AMENDED	KLM	MM	JD
E	11/2000		DRAWING NOTES REVISED	PAM	~~KRD~~	KR.

SCALE: DIAGRAMMATIC

F.S.L. = FINISHED SURFACE LEVEL

SURVEY BOOKS	VERTICAL DATUM AHD	DES CALC W 7087	NORTH POINT
	COORDINATE SYS UNKNOWN	DES CHD 2/94	
	DES REF	DRN F. RACCUIA	
		Q.C. CHD P. WINFIELD	

RECOMMENDED 30/06/1994
P.M. WINFIELD (SIGNED)
FOR SUPERVISING ENGINEER

APPROVED 30/06/1994
D.S. BROOKS (SIGNED)
FOR MANAGER W.S.P. & DESIGN

WATER CORPORATION

WATER RETICULATION
STANDARD DRAWINGS
PE MAIN LAYING INSTALLATION FOR CUL-DE-SAC
TYPE A – UP TO 10 SERVICES

FILE
PROJECT
PLAN BD62-7-1
CAD
ISSUE I
ORIGINAL SHEET SIZE A2
MF

400
566

© THIS DRAWING IS THE PROPERTY OF THE WATER CORPORATION. IT SHALL NOT BE COPIED WITHOUT PERMISSION.

CAD MANAGEMENT_NOT READ ONLY\WDCS\STANDARD DRAWINGS\DS63\BD62\BD62-007-001-01I 09:09 20/05/2021 EDWARDM3/NB41253