DocuSign Envelope ID: 0C4A1C45-BB6E-4BE4-9477-A91936775E2D

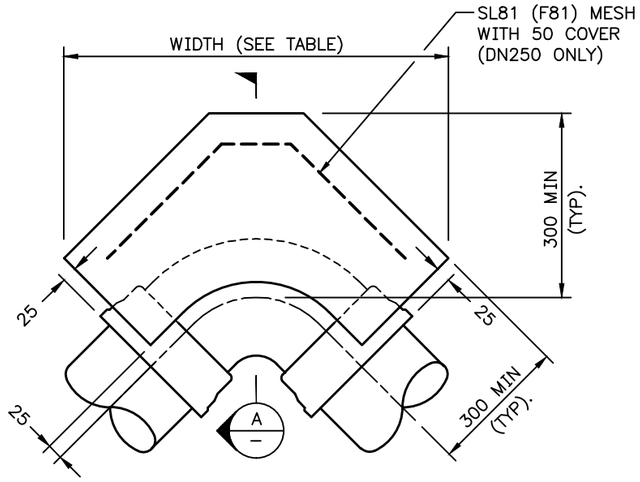

PLAN – 90° BENDS

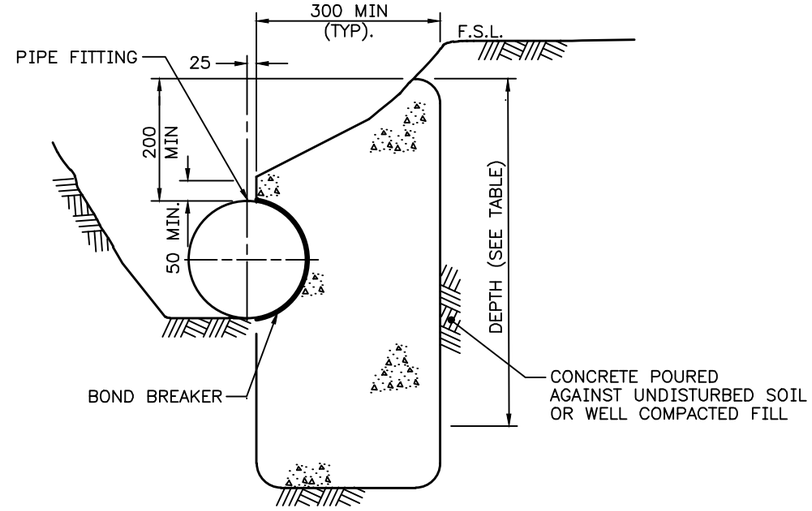

SECTION A

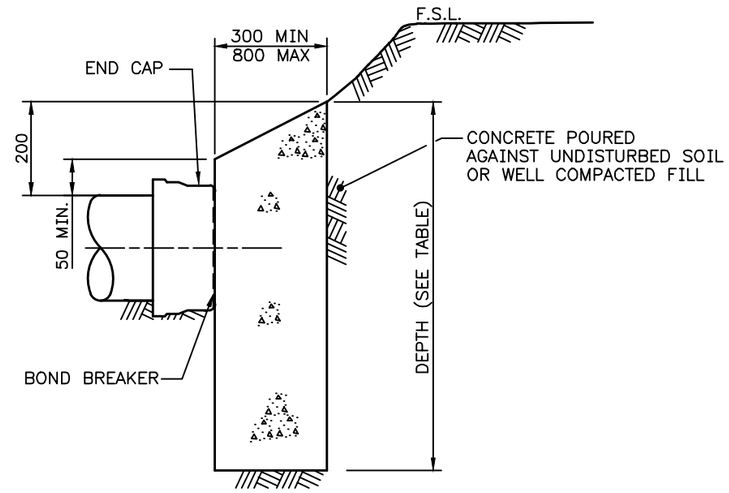

SECTION B

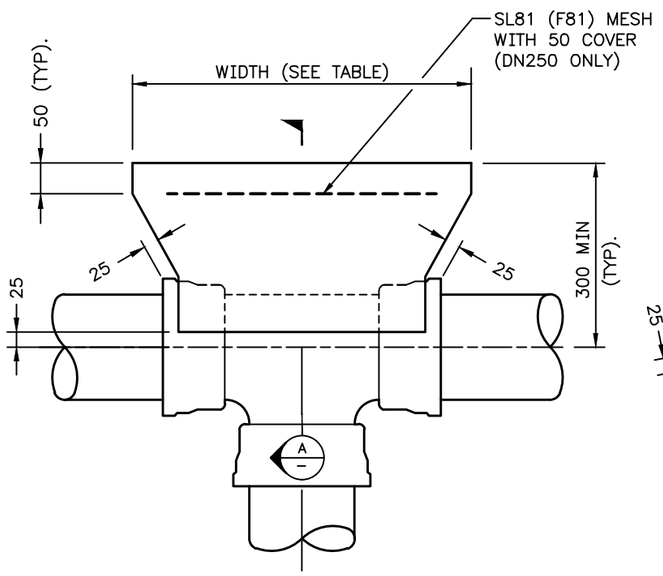

PLAN – TEES

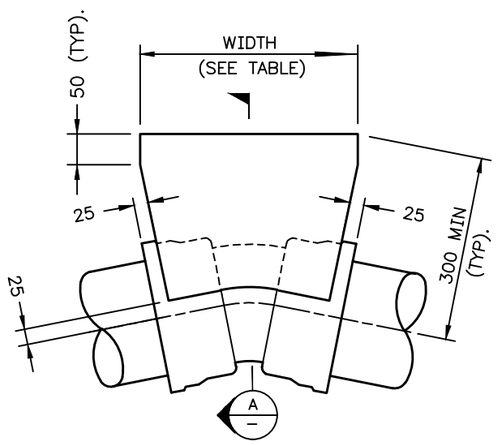

PLAN – 11.25° TO 45° BENDS

NOMINAL DIAMETER	TYPE OF FITTING	WIDTH MIN.	DEPTH MIN.
200	90° BEND	1100	1000
	45° BEND	700	900
	22.5° BEND	400	900
	11.25° BEND	300	700
	TEE & BL. END	900	900
250	90° BEND *	1100	1300
	45° BEND	900	1000
	22.5° BEND	500	1000
	11.25° BEND	400	750
	TEE & BL. END	1200	1000

* THRUST SUPPORT SHOULD BE REINFORCED CONCRETE

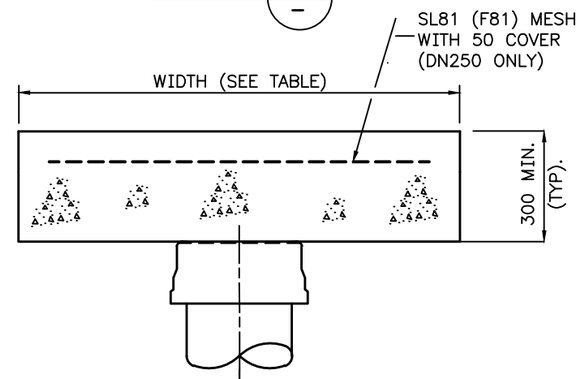

BLANK ENDS

WIDTH OF THRUST SUPPORT BLOCK SHALL BE DESIGNED FOR BRANCH DIAMETER. REFER TO BD62–2–5 FOR BRANCH DIA SMALLER THAN 200mm

SCALE : DIAGRAMMATIC

NOTES :

1. JUSTIFICATION FOR THRUST SUPPORT BLOCKS LARGER THAN SHOWN IN THE TABLE SHALL BE SUBMITTED FOR RECORD PURPOSES PRIOR TO ISSUE OF DESIGN DRAWINGS
2. POLYETHYLENE SLEEVING SHALL BE INSTALLED ON DI PIPELINES TO AS3680
3. THRUST SUPPORTS ARE INTENDED TO RESIST AN ASSUMED 1200 kPa (120m) MAXIMUM THRUST AGAINST COMPACT UNDISTURBED SOIL OR WELL COMPACTED FILL MATERIAL
4. WELL COMPACTED FILL SHALL PROVIDE A FILL PENETRATION RESISTANCE OF AT LEAST 7 BLOWS PER 300MM OF PENETRATION, WHEN TESTED IN ACCORDANCE WITH AS1289.6.3.3
5. PIPELINE FITTINGS TO BE PROVIDED WITH CONCRETE THRUST SUPPORT SHALL BE OVER–WRAPPED WITH A BOND–BREAKING MEMBRANE OF ACCEPTABLE DESIGN PRIOR TO CONCRETING
6. PIPELINE JOINTS SHALL NOT BE WHOLLY OR PARTIALLY ENCASED IN CONCRETE
7. CONCRETE SHALL BE GRADE N25
8. BEARING CAPACITY CALCULATIONS OF SOIL MATERIAL (CLAYEY SAND) TAKEN TO BE 92kPa
9. THRUST BLOCKS MUST NOT ENCROACH BEYOND THE NORMAL WATER RETICULATION ALIGNMENT BOUNDARIES F

ISSUE	DATE	GRID	REVISION	DRN	REC	APPD
F	01/2024		NOTE 9 ADDED	ME	JA	AA
E	05/2012		THRUST SUPPORTS AMENDED	AC	CW	PF
D	11/2000		DRAWING NOTES REVISED	PAM	K.R.	K.R.

DES CALC W 7087
J.DAVIES
DES CHD 6/94

DRN
C.BAGSHAW
Q.C. CHD
P.WINFIELD

RECOMMENDED 01/07/1994
J. DAVIES (SIGNED)
FOR SUPERVISING ENGINEER

APPROVED 01/07/1994
D.S. BROOKS (SIGNED)
FOR MANAGER W.S.P. & DESIGN

WATER CORPORATION

WATER RETICULATION
STANDARD DRAWINGS
CONCRETE THRUST SUPPORTS – DN200 & DN250
BENDS, TEES & BLANK ENDS – PVC & DI PIPELINES

FILE
PROJECT
PLAN BD62–2–5
CAD
ISSUE F
ORIGINAL SHEET SIZE A3
MF

283
394

© THIS DRAWING IS THE PROPERTY OF THE WATER CORPORATION. IT SHALL NOT BE REPRODUCED WITHOUT PERMISSION.