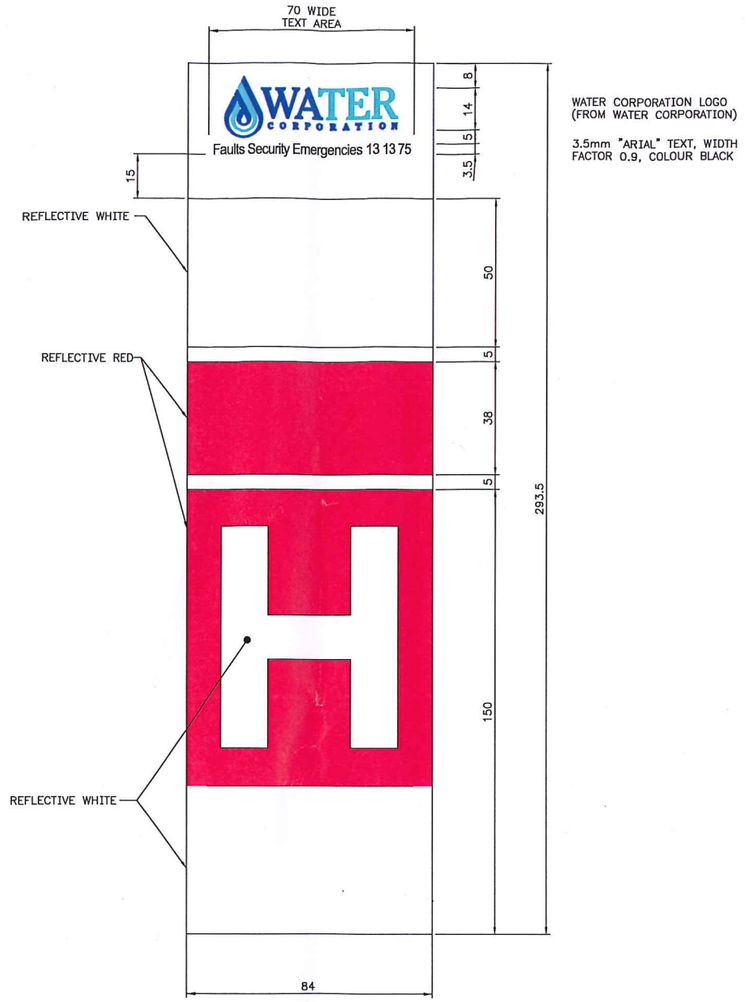

WATER CORPORATION LOGO
(FROM WATER CORPORATION)

3.5mm "ARIAL" TEXT, WIDTH
FACTOR 0.9, COLOUR BLACK

LABEL DETAIL

SCALE (1)

LABEL MATERIAL:
"3M SCOTCHLITE" WHITE AND RED REFLECTIVE VINYL CLASS 2 WITH PROTECTIVE LAMINATE OVERLAY

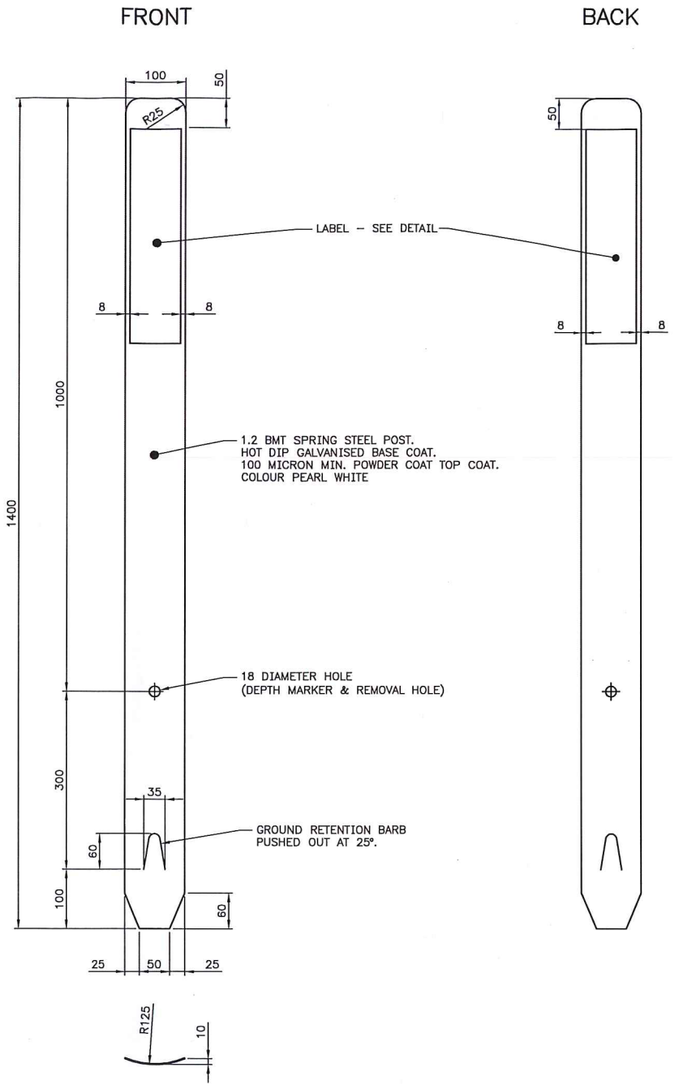

POST DETAIL

SCALE (2)

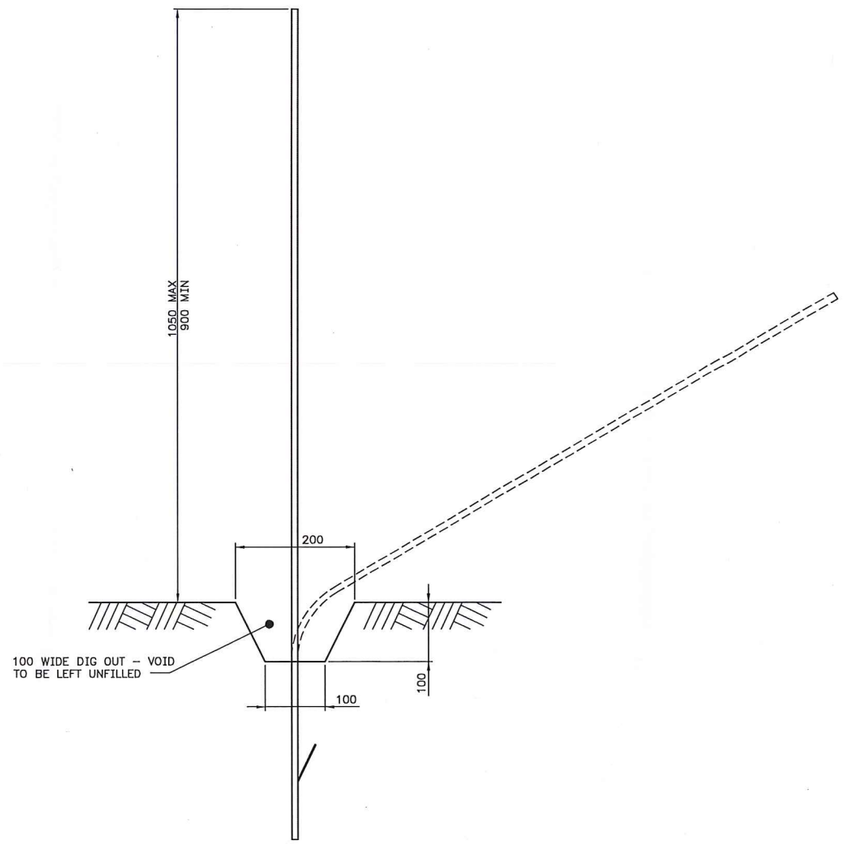

INSTALLATION DETAIL

SCALE (2)

INSTALLATION PROCEDURE FOR HARD GROUND:

1. REMOVE SECTION OF SOIL WITH MATTICK OR SPADE
2. DRIVE POST INTO GROUND WITH EITHER A MANUAL DRIVER OR PNUEMATIC DRIVER (WITH A CAP) USING SHORT LIGHT STROKES
3. CONTINUE DRIVING UNTIL DEPTH MARKER IS AT GROUND LEVEL

INSTALLATION PROCEDURE FOR SOFT GROUND:

1. DRIVE POST INTO GROUND WITH EITHER A MANUAL DRIVER OR PNUEMATIC DRIVER (WITH A CAP) USING SHORT LIGHT STROKES
2. CONTINUE DRIVING UNTIL DEPTH MARKER IS AT GROUND LEVEL

MARKER POST LOCATION

1. MARKET POST LOCATION MARKER POST TO BE LOCATED WITHIN 500mm OF HYDRANT COVER AND ANGLED TOWARDS ON COMING TRAFFIC FLOW

MMR	21065	MARKER POST AVAILABLE FROM ROADSIDE PRODUCTS

(1) 10 5 0 10 20 30 40 50 60 70 mm (1:1)

(2) 100 50 0 100 200 300 mm (1:5)

THIS DRAWING HAS BEEN DERIVED FROM KA76–1–5C

ISSUE	DATE	GRID	REVISION	DRN	REC	APPD
C	10/2017		MARKER POST LOCATION NOTE 1 AMENDED	BJ	CW	CW
B	04/2012		LABEL COLOUR ADDED	KLM	CW	PF

DESIGN SURVEY NONE | VERTICAL DATUM NONE | DES CALC N/A | COORDINATE SYS NONE | DES CHD N/A | ASCON SURVEY NONE | DES REF | DRN B.JEFFERS | Q.C. CHD P. MIRCO

NORTH POINT

ENGINEERING

RECOMMENDED 21/07/2011
C WOOLFORD (SIGNED)
SENIOR ENGINEER

APPROVED 21/07/2011
L DAVIES (SIGNED)
PRINCIPAL ENGINEER

WATER CORPORATION

WATER CORPORATION
MARKER POST & SIGNAGE STANDARD DRAWINGS
FIRE HYDRANT – MARKER POST
TYPICAL DETAILS

ORIGINAL SHEET SIZE A1

FILE | PLAN KA76–1–5 | CAD | ISSUE C | MC 23/10/17

PROJECT

566
810

© THIS DRAWING IS THE PROPERTY OF THE WATER CORPORATION. IT SHALL NOT BE COPIED WITHOUT PERMISSION.

CAD MANAGEMENT_NOT READ ONLY\WDCS\STANDARD DRAWINGS\DS63\KA76\CAD\KA76\KA76–001–005–01C 13:24 13/10/2017 JEFFERB1/WS26781