WORK CARRIED OUT BY WATER RETICULATION CONSTRUCTOR AT TIME OF WATERMAIN INSTALLATION

TYPICAL ARRANGEMENT WHERE FINISHED LOT AND ROAD VERGE SURFACE ELEVATIONS ARE SIMILAR

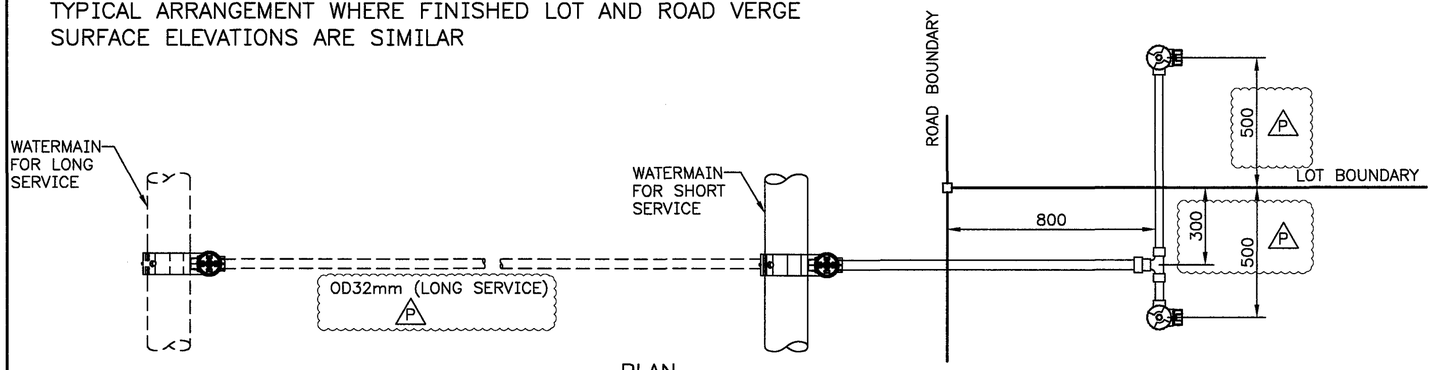

PLAN

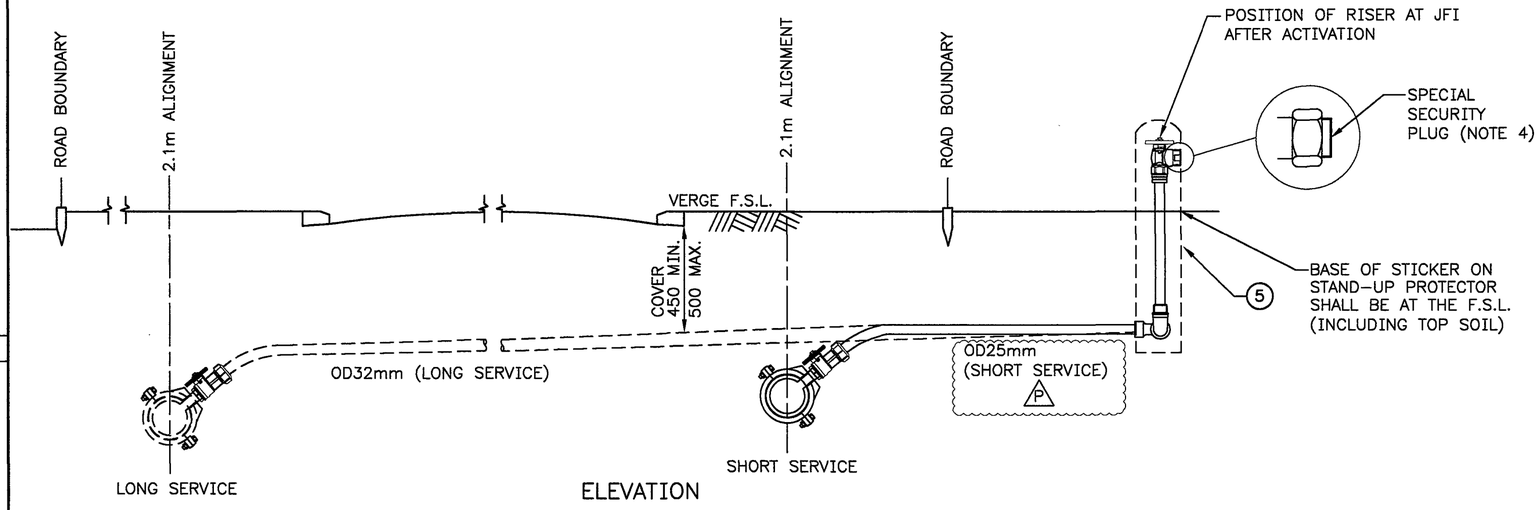

ELEVATION

TYPICAL VARIATIONS TO ARRANGEMENT FOR ADJACENT LOTS AT DIFFERENT ELEVATIONS AND/OR LOTS AT DIFFERENT ELEVATION TO ROAD RESERVE (WITH RETAINING WALL)

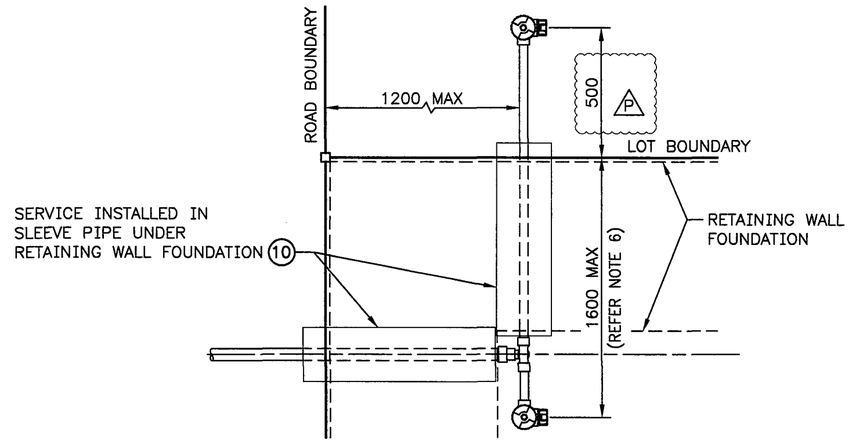

PLAN

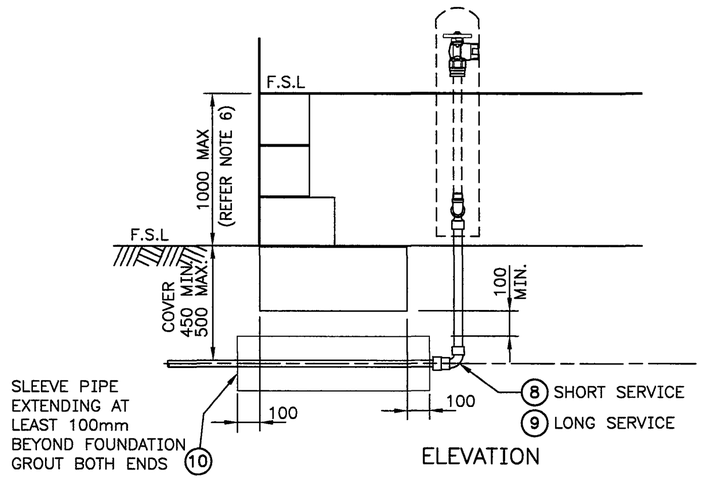

ELEVATION

P

TABLE OF MATERIALS AND STANDARDS (NOTE 6)						
MARK	PIPE/FITTING DESCRIPTION	MATERIAL	UPSTREAM END	DOWNSTREAM END	STANDARD	MMR
10	DN100 SN10 PVC Pipe	uPVC	#N/A	#N/A	AS/NZS1260	–
9	OD32 90° Elbow	PP	OD32 PE c/w O Ring Seal	OD32 PE c/w O Ring Seal	AS/NZS4129	20168
8	OD25 90° Elbow	PP	OD25 PE c/w O Ring Seal	OD25 PE c/w O Ring Seal	AS/NZS4129	18369
5	Stand–up Protector	PE100	#N/A	#N/A	BD64–9–1	20245

NOTES:

1. SHORT DUAL SERVICE CONNECTIONS SHALL BE DN20 (OD25 PE PIPE) AND LONG DUAL SERVICE CONNECTIONS SHALL BE DN25 (OD32 PE PIPE).
2. REFER TO DRAWINGS BD62–8–8 & BD62–8–10 FOR SERVICE CONFIGURATION AND FITTING DETAILS.
3. EACH PRELAID SERVICE INCLUDING DRY WATER MAIN TAPPINGS, SERVICE PIPELINE AND STOP TAP SHALL BE INSTALLED AT THE TIME OF WATER MAIN INSTALLATION. EACH SERVICE RISER PIPE SHALL BE PROTECTED BY MEANS OF A STAND–UP PROTECTOR IN ACCORDANCE WITH DRAWING BD64–9–1.
4. EACH SERVICE CONNECTION ASSEMBLY SHALL BE PRESSURE TESTED AND MAINTAINED IN LIVE CONDITION WITH IT'S BALL VALVE SEALED WITH A SPECIAL SECURITY PLUG.
5. THE CORPORATION WILL INSTALL THE SERVICE METER AND TEMPORARY BUILDERS' STANDPIPE AND WILL ACTIVATE THE SERVICE, WHEN THE PROPERTY OWNER HAS COMPLETED SERVICE APPLICATION FORMALITIES.
6. REFER BD62–8–8 AND BD62–8–10 FOR ADDITIONAL MATERIAL DETAILS. P

ISSUE	DATE	GRID	REVISION	DRN	REC	APPD
P	04/2019		MATERIALS LIST & DIMENSIONS REVISED	MD		
O	04/2013		RISER DETAILS, TABLE AND NOTES AMENDED	BJ	CW	DVDN
N	09/2012		SHORT SERVICE AND LONG SERVICE CONNECTIONS AMENDED, TABLE AND NOTES AMENDED	BJ	CW	KR

F.S.L. = FINISHED SURFACE LEVEL

SCALE : DIAGRAMMATIC

DESIGN SURVEY NONE	VERTICAL DATUM AHD	DES CALC W 7087	NORTH POINT	RECOMMENDED 30/06/1994 P.M. WINFIELD (SIGNED) FOR SUPERVISING ENGINEER
	COORDINATE SYS NONE	DES CHD 2/94		
ASCON SURVEY NONE	DES REF	DRN F. RACCUIA		APPROVED 30/06/1994 D.S. BROOKS (SIGNED) FOR MANAGER W.S.P. & DESIGN
		Q.C. CHD P. WINFIELD		

WATER CORPORATION

WATER RETICULATION STANDARD DRAWINGS
PRELAID DUAL WATER SERVICES (DN20 SHORT & DN25 LONG) TYPICAL ARRANGEMENT (OD25 & OD32 PE PIPE REPECTIVELY)

FILE | PLAN BD62–8–24 CAD | ISSUE P | ORIGINAL SHEET SIZE A2

PROJECT

MF 10 APR 2019

400 566

© THIS DRAWING IS THE PROPERTY OF THE WATER CORPORATION. IT SHALL NOT BE COPIED WITHOUT PERMISSION.

CAD MANAGEMENT_NOT READ ONLY\WDCS\STANDARD DRAWINGS\DS63\BD62\BD62–008–024–01P 07:12 10/04/2019 madetkl0/WS27107