DocuSign Envelope ID: 0C4A1C45-BB6E-4BE4-9477-A91936775E2D

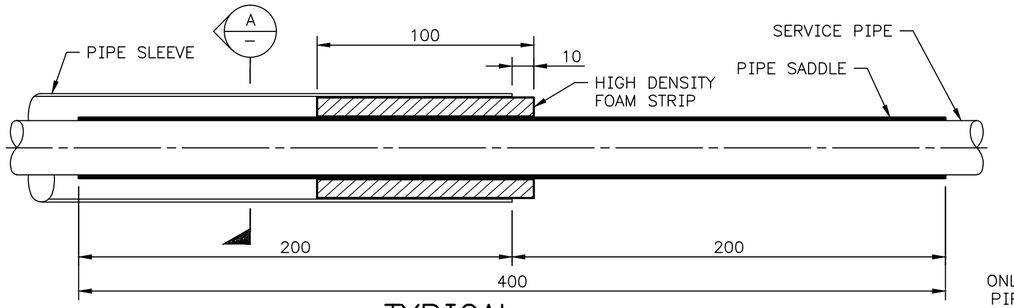

TYPICAL SEALING OF PIPE SLEEVE END

NOTE:
ONLY APPLIES WHEN PIPE SLEEVE USED.
(REFER NOTE 11)

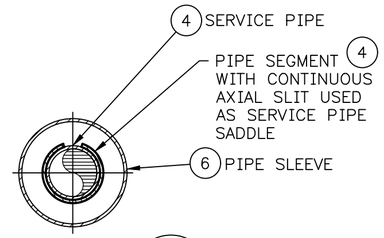

SECTION A — TYPICAL SERVICE PIPE SADDLE

NOTE:
ONLY APPLIES WHEN PIPE SLEEVE USED.
(REFER NOTE 11)

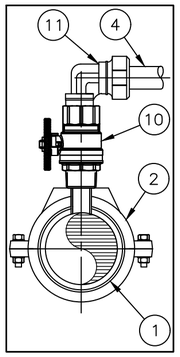

CONFIGURATION 'B'

DN20 PRELAID DRY TAPPED ONLY WHERE CONFIGURATION 'A' PROVES IMPRACTICABLE

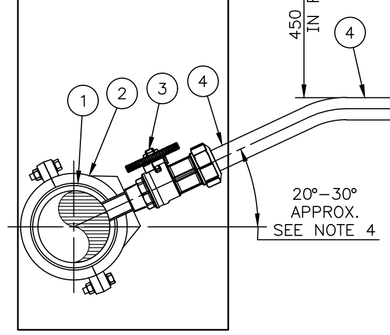

CONFIGURATION 'A'

DN20 PRELAID DRY TAPPED PREFERRED

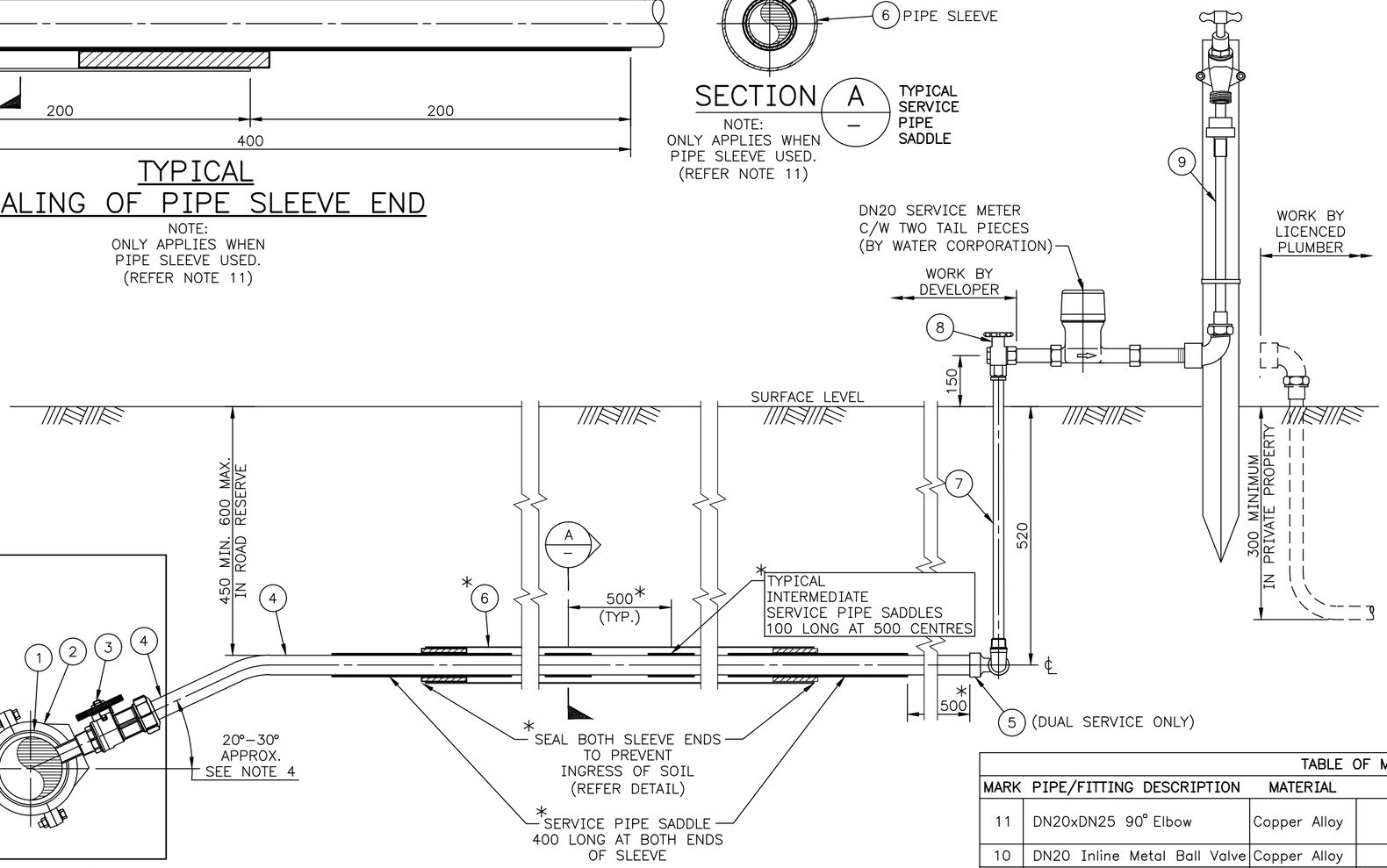

ELEVATION

NOTE:
ITEMS MARKED WITH "*" ONLY APPLY WHEN PIPE SLEEVE USED.
(REFER NOTE 11)

NOTES:

1. EACH TAPPING BAND SHALL BE POSITIONED AT LEAST 300mm CLEAR OF ANY WATERMAIN JOINT OR FITTING.
2. PIPE FITTINGS FOR MECHANICAL JOINTING OF PE PIPE AND INCORPORATING 'O' RING SEALS SHALL BE TO AS/NZS 4129 AND SHALL BE RATED PN16 OR HIGHER.
3. THREADED PIPE FITTING ENDS SHALL BE SERIES 'R' (EXTERNALLY THREADED) AND SERIES RP (INTERNALLY THREADED) TO AS ISO 7.1.
4. THE SERVICE INSTALLATION WORK SHALL BE IN TWO STAGES. IN THE FIRST STAGE, THE CORPORATION WILL INSTALL EACH SERVICE METER AND TAILPIECE ASSEMBLY AND THE TEMPORARY BUILDER'S STANDPIPE ASSEMBLY. IN THE SECOND STAGE, THE STANDPIPE ASSEMBLY SHALL BE REMOVED AND THE INTERNAL PROPERTY SERVICE SHALL BE INSTALLED BY A LICENCED PLUMBER.
5. EACH PRELAID DRY–TAPPED SERVICE SHALL BE CONNECTED TO THE WATERMAIN, PRESSURE TESTED AND DISINFECTED AT THE TIME OF WATERMAIN INSTALLATION. EACH CONNECTED WATERMAIN AND SERVICE INSTALLATION SHALL BE HANDED OVER TO THE CORPORATION IN LIVE OPERATIONAL CONDITION.
6. SERVICE TAPPING HOLES DRILLED IN WATERMAINS SHALL BE 19.5mm IN DIAMETER FOR DN20 TAPPINGS.
7. EACH WATERMAIN TAPPING HOLE, TAPPING BOSS SERVICE TAPPING, TAILPIECE AND DOWNSTREAM SERVICE OFFTAKE FITTING SHALL BE INSTALLED CONCENTRICALLY.
8. ANTI–TUBERCULATION TAILPIECES SHALL BE INSTALLED WHEREVER TAPPING BANDS ARE INSTALLED ON UNLINED METALLIC PIPE. REFER DRAWING BD22–11–5–1.
9. INSTALL PE SERVICE PIPE AT ANGLE TO ACHIEVE MINIMUM 150mm CLEARANCE FROM OTHER UTILITIES.
10. PE PIPE SHALL:
    (a) HAVE AN SDR OF 9 OR LOWER;
    (b) BE DISINFECTION RESISTANT AS DEFINED IN SPS125;
    (c) BE HSCR AS PER PIPA POP016;
    (d) COMPLY WITH AS 4130; AND
    (e) BE MANUFACTURED FROM A RESIN LISTED IN THE STRATEGIC PRODUCT REGISTER.
11. SLEEVING OF SERVICE REQUIRED NORTH OF 26° LATITUDE ONLY.

TABLE OF MATERIALS AND STANDARDS

MARK	PIPE/FITTING DESCRIPTION	MATERIAL	UPSTREAM END	DOWNSTREAM END	STANDARD	MMR
11	DN20xDN25 90° Elbow	Copper Alloy	R ¾/20	DN25 PE c/w Ring & Gasket	AS/NZS4129	21102
10	DN20 Inline Metal Ball Valve	Copper Alloy	R ¾/20	RP ¾/20	SPS 251	19900
9	DN20 Standpipe Assembly	Various	#N/A	#N/A	BD62–10–1	17001
8	DN20 Meter Ball Valve	Copper Alloy	RP ¾/20	RP ¾/20	SPS 254	19835
7	DN20 Copper Riser Assembly	Copper Alloy	DN25 PE c/w O Ring Seal	R ¾/20	BD22–5–8	21150
6	DN50 PN12 PIPE SLEEVE	uPVC	#N/A	#N/A	SPS115	7836
5	DN25 PE Tee c/w DN25 Branch Q	Copper Alloy	DN25 PE c/w O Ring Seal	DN25 PE c/w O Ring Seal (2 No.)	AS/NZS4129	22709 Q
4	OD25 Polyethylene Pipe	PE100 (NOTE 10)	#N/A	#N/A	AS/NZS4130	22798
3	DN20 Inline Metal Ball Valve	Copper Alloy	R ¾/20	DN25 PE c/w Ring Seal	SPS 251	21865
2	Tapping Band tapped DN20	To suit pipe	#N/A	RP¾ /20	DS63 Table 3.1	
1	Reticulation Watermain	PVC/MS/CI DI/AC/CU	#N/A	#N/A	DS63 Table 3.1	

SCALE: DIAGRAMMATIC

ISSUE	DATE	GRID	REVISION	DRN	REC	APPD
Q	01/2024		ITEM 5 MATERIAL AND MMR UPDATED	ME	JA	AA
P	05/2021		MARK 4 IN TABLE AND NOTE 10 AMENDED.	ME	AA	JD
O	04/2019		SLEEVE ADDED, NOTES AND COMPONENTS UPDATED	MD	AA	JD
N	03/2013		ITEM NUMBERS, DETAILS, DIMENSIONS AMENDED, ITEMS 8–11 ADDED, NOTES 7–10 ADDED	BJ	CW	DVDN
M	09/2012		NOTES, TABLE AND CONFIGURATIONS AMENDED	BJ	CW	KR
L	04/2012		WATER METER UPDATED	AC	CW	PF

SURVEY BOOKS	VERTICAL DATUM AHD	DES CALC W 7087	NORTH POINT
	COORDINATE SYS NONE	DES CHD 2/94	
	DES REF	DRN F. RACCUIA	
		Q.C. CHD P. WINFIELD	

RECOMMENDED 30/06/1994
P.M. WINFIELD (SIGNED)
FOR SUPERVISING ENGINEER

APPROVED 30/06/1994
D.S. BROOKS (SIGNED)
FOR MANAGER W.S.P. & DESIGN

WATER CORPORATION

WATER RETICULATION
STANDARD DRAWINGS
DN20 WATER SERVICE (OD25 PE PIPE)
DRY TAPPED ARRANGEMENTS

FILE	PLAN	CAD	ISSUE	ORIGINAL SHEET SIZE
PROJECT	BD62–8–10		Q	A2
				MF

© THIS DRAWING IS THE PROPERTY OF THE WATER CORPORATION. IT SHALL NOT BE COPIED WITHOUT PERMISSION.

CAD MANAGEMENT_NOT READ ONLY\WDCS\STANDARD DRAWINGS\DS63\DS63 UPDATES 2024\BD62–008–010–01Q 09:26 22/01/2024 EDWARDM3/NB41253

400
566