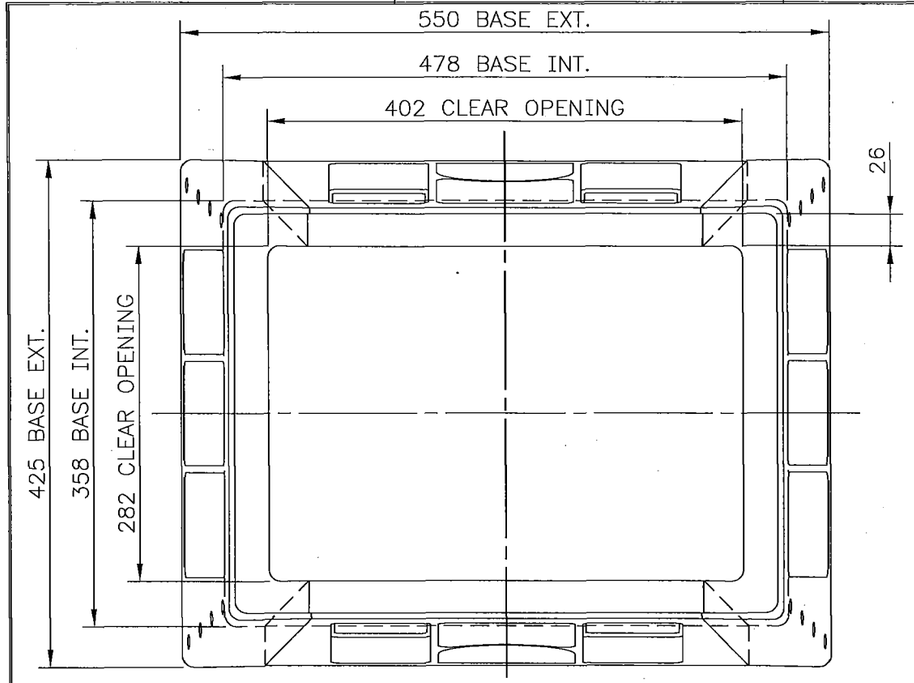

TOP VIEW

SCALE: 1

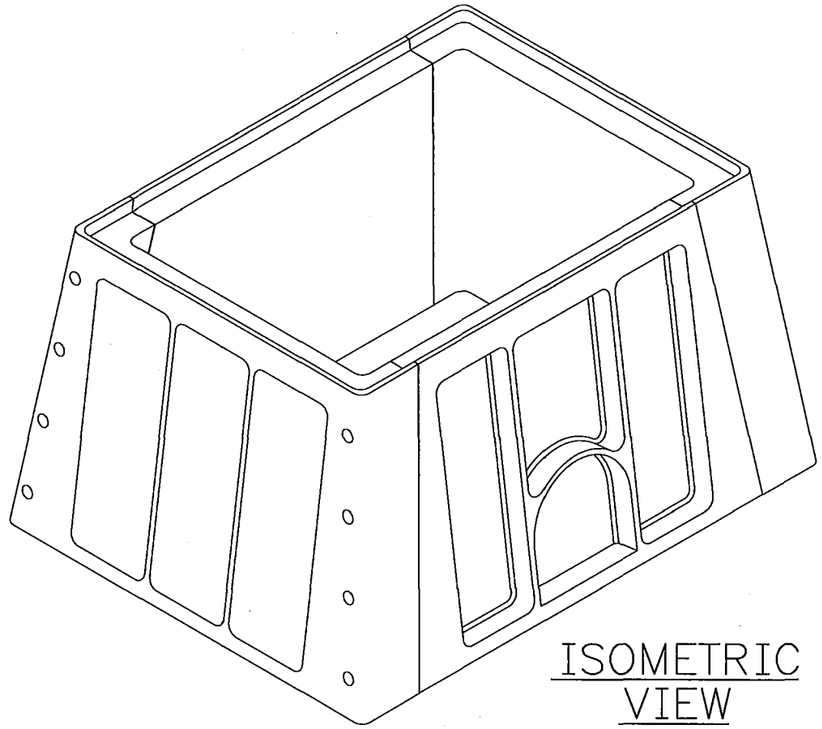

ISOMETRIC VIEW

SCALE: 1

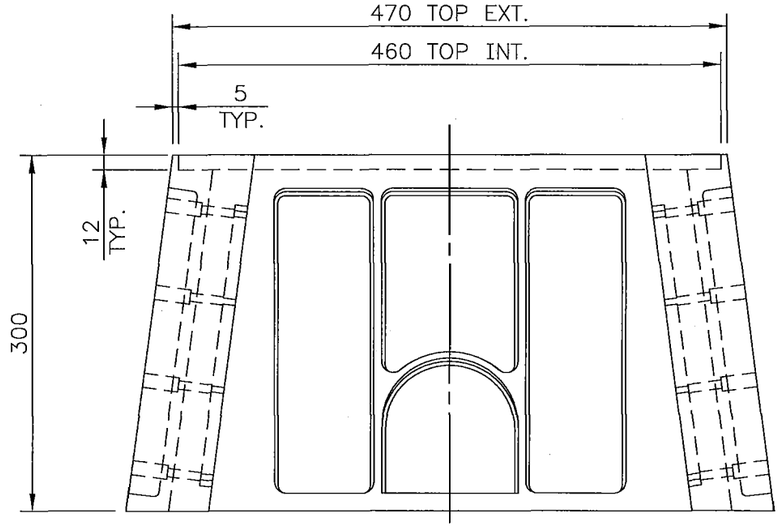

FRONT VIEW

SCALE: 1

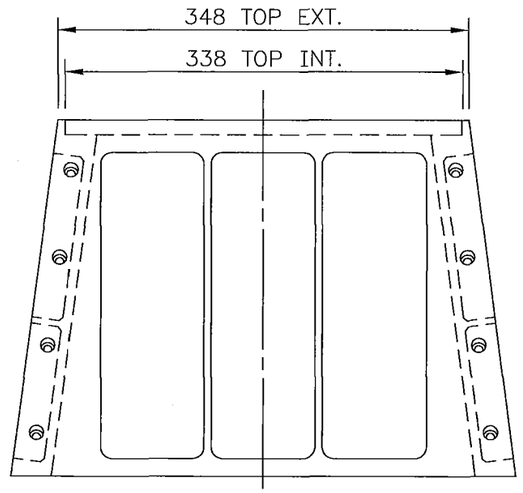

RIGHT VIEW

SCALE: 1

REFERENCE DRAWINGS:

BD62-2-1	SLUICE VALVE & HYDRANT – TYPICAL INSTALLATION DETAILS.
AQ71-1-2	MISC. CAST IRON ITEMS – HYDRANT INSPECTION COVER AND FRAME.

NOTES:

1. MATERIAL MASTER RECORD (MMR) No. 21929.
2. UNDERBOX TESTED TO CLASS D (AS 3996).
3. PRODUCT SUITABLE FOR USE IN TRAFFICABLE PAVED APPLICATIONS.
4. WHEN USED WITH HYDRANT COVER (DRG. AQ71-1-2) COMBINED ASSEMBLY IS CLASS C.

1 100 50 0 100 200 300 mm (1:5 AT A3)

DES CALC C. WOOLFORD DES CHD J. DAVIES	RECOMMENDED CWoolford 15/11/2017 SENIOR ENGINEER, WDCS	WATER CORPORATION
DRN C. WOODHEAD Q.C. CHD F. RACCUIA	APPROVED JDavies 16/11/17 SENIOR PRINCIPAL ENGINEER, WDCS	

WATER RETICULATION
STANDARD DRAWINGS
HYDRANT SERVICE CHAMBER
GRP PLASTIC UNDERBOX

FILE JT1 2010 11795 V01	PLAN	CAD	ISSUE
PROJECT	BD64-10-2		A

ORIGINAL SHEET SIZE A3

MF 21 NOV 2017

283
394

© THIS DRAWING IS THE PROPERTY OF THE WATER CORPORATION. IT SHALL NOT BE COPIED WITHOUT PERMISSION.

CAD MANAGEMENT_NOT READ ONLY\WDCS\STANDARD DRAWINGS\VALVE BOX\CAD\CHRIS WOODHEAD\BD64-010-002-01A 09:35 15/11/2017 JEFFERB1/WS26781