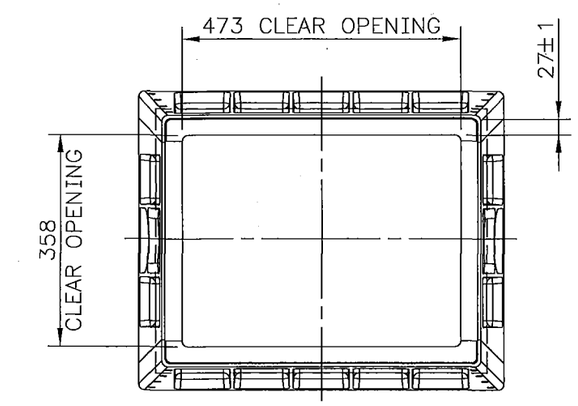

PLAN

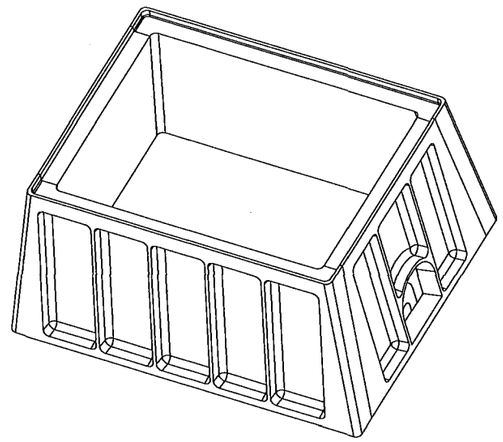

ISOMETRIC VIEW

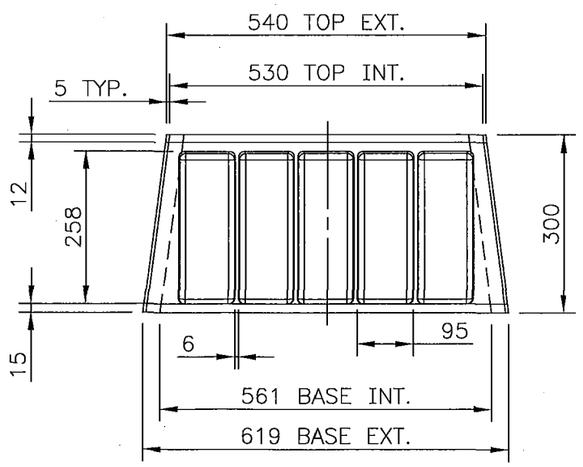

ELEVATION A

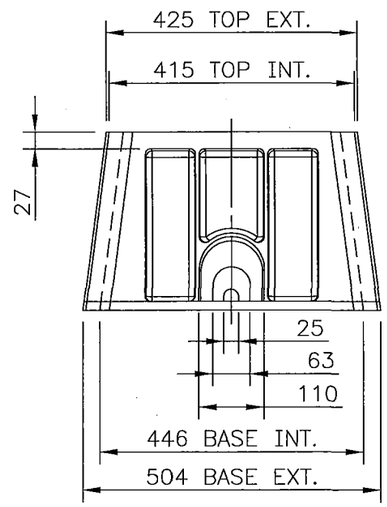

ELEVATION B

REFERENCE DRAWINGS:

AQ71–1–1	CAST IRON COVER AND FRAME
BD62–2–9	WATER METER/VALVE SERVICE CHAMBER TYPICAL INSTALLATION DETAILS

NOTES:

1. MATERIAL MASTER RECORD (MMR) No. 21099.
2. UNDERBOX TESTED TO CLASS D (AS 3996).
3. PRODUCT SUITABLE FOR USE IN TRAFFICABLE PAVED APPLICATIONS.
4. WHEN USED WITH METER COVER (DRG. AQ71–1–1) COMBINED ASSEMBLY IS CLASS C.

100 50 0 100 200 300 400 500 600 700 mm (1:10 AT A3)

ISSUE	DATE	GRID	REVISION	DRN	REC	APPD
C	11/2017		DIMENSIONS AMENDED	BJ	CW	CW
B	10/2017		DIMS. FOR OPENING AT BASE ADDED, NOTE 2 AMENDED, DIMS. ROUNDED UP	CJW	CW	JD

DES CALC
C. WOOLFORD
DES CHD
C. WOOLFORD
DRN
A. CLEAVER
Q.C. CHD
P. MIRCO

RECOMMENDED 10/06/2013
C. WOOLFORD (SIGNED)
SENIOR ENGINEER, WDC&S

APPROVED 10/06/2013
P.J. FINLAY (SIGNED)
PRINCIPAL ENGINEER, WDC&S

WATER CORPORATION

WATER RETICULATION
STANDARD DRAWINGS
WATER METER/VALVE SERVICE CHAMBER
GRP PLASTIC UNDERBOX

FILE JT1 2010 11795 V01
PROJECT
PLAN BD64–10–1
CAD
ISSUE C

ORIGINAL SHEET SIZE A3

MF 24 NOV 2017

283
394

© THIS DRAWING IS THE PROPERTY OF THE WATER CORPORATION. IT SHALL NOT BE COPIED WITHOUT PERMISSION.

CAD MANAGEMENT_NOT READ ONLY\WDCS\STANDARD DRAWINGS\VALVE BOX\CAD\CHRIS WOODHEAD\BD64-010-001-01C 14:28 23/11/2017 JEFFERB1/WS26781