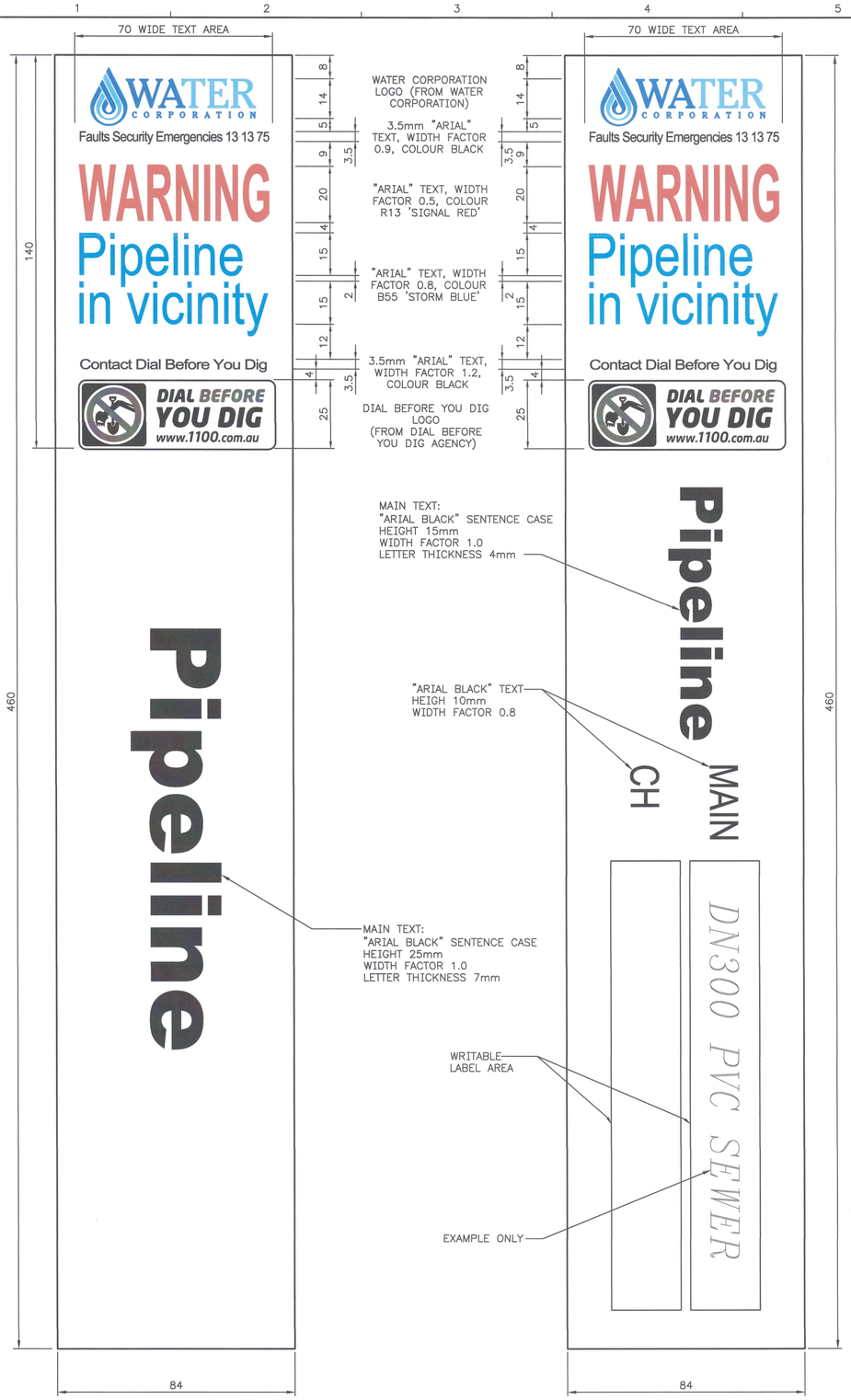


GENERAL LABEL (TYPICAL USE)

SCALE 1

CHAINAGE LABEL (WHERE SPECIFIED)

SCALE 1

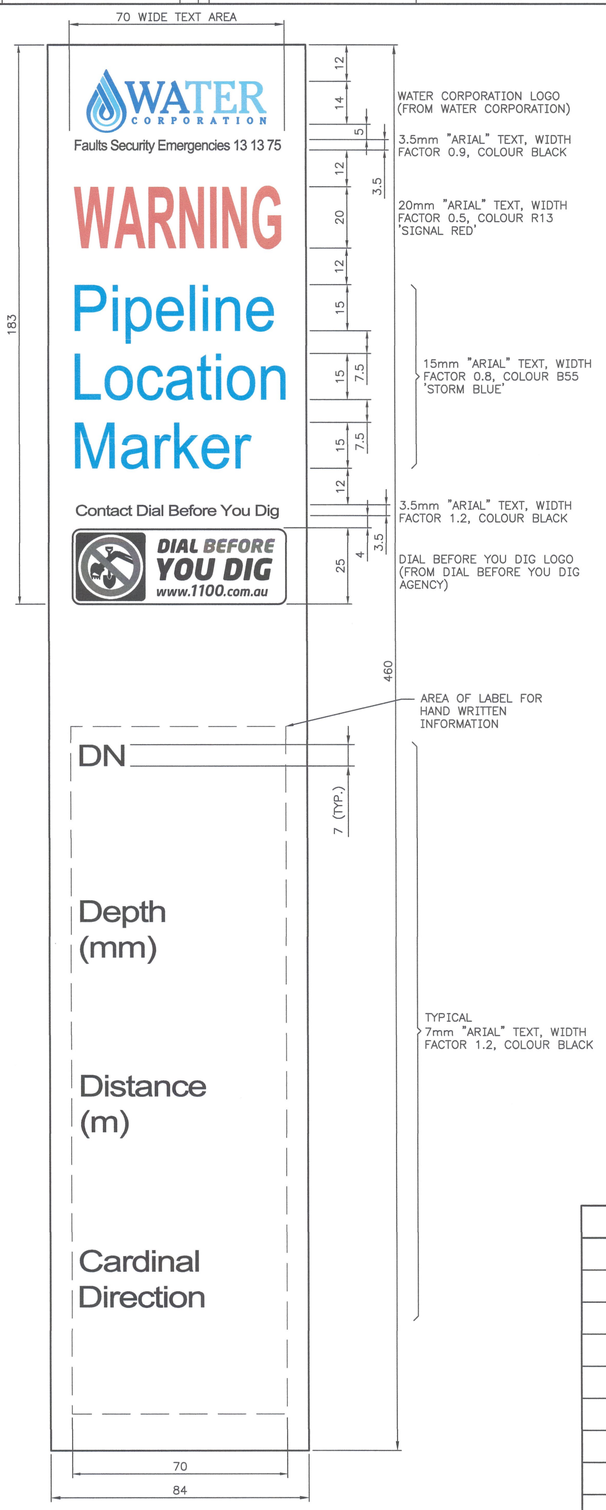


LABEL FOR DEPTH AND DIRECTION (RAIL CROSSINGS & WHERE APPLICABLE)

SCALE 1

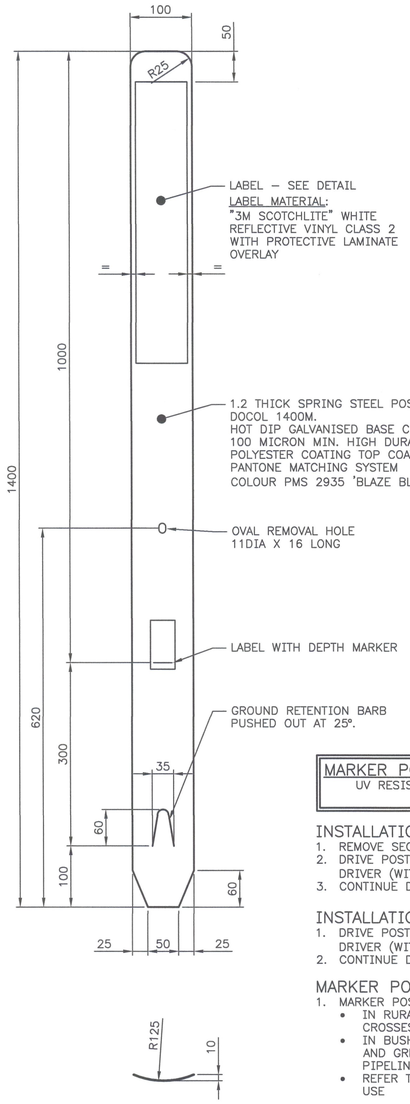


POST DETAIL

SCALE 2

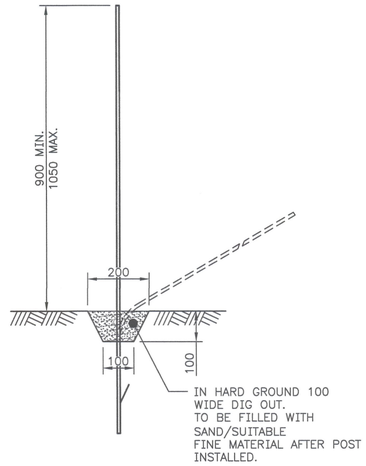


INSTALLATION DETAIL

SCALE 3

MARKER POST PEN TO BE USED:
UV RESISTANT, FINE POINT, BLACK
MMR: 22030

INSTALLATION PROCEDURE FOR HARD GROUND:
1. REMOVE SECTION OF SOIL WITH MATTOCK OR SPADE
2. DRIVE POST INTO GROUND WITH EITHER A MANUAL DRIVER OR PNEUMATIC DRIVER (WITH A CAP) USING SHORT LIGHT STROKES
3. CONTINUE DRIVING UNTIL DEPTH MARKER IS AT GROUND LEVEL

INSTALLATION PROCEDURE FOR MEDIUM AND SOFT GROUND:
1. DRIVE POST INTO GROUND WITH EITHER A MANUAL DRIVER OR PNEUMATIC DRIVER (WITH A CAP) USING SHORT LIGHT STROKES
2. CONTINUE DRIVING UNTIL DEPTH MARKER IS AT GROUND LEVEL

MARKER POST LOCATIONS:
1. MARKER POSTS SHALL BE INSTALLED AS FOLLOWS–
   - IN RURAL FARMLAND AREAS :– ON CENTRELINE OF PIPE WHERE PIPE CROSSES A FENCLINE.
   - IN BUSHLAND :– ON CENTRELINE OF PIPE, AT HORIZONTAL BENDS 11.25° AND GREATER AND AT INTERVALS NOT EXCEEDING 300mm ALONG STRAIGHT PIPELINE SECTIONS.
   - REFER TO DESIGN STANDARD DS101 PIPELINE SIGNAGE FOR LOCATION AND USE

NOTES:
1. MANUAL HAND OPERATED DRIVER TO INSTALL THESE FLEXI TYPE STEEL MARKER POSTS IS MMR 20995 (AVAILABLE FROM ROADSIDE PRODUCTS)

| MMR | POST TEXT | NO. OFF. | |
|---|---|---|---|
| 20974 | **Pipeline** | | PREFERRED GENERIC SIGN FOR USE IN MOST SITUATIONS – SEE NOTES |
| 20975 | **Gravity Sewer** | | ONLY USE IN SPECIAL CIRCUMSTANCES – SEE NOTES |
| 20976 | **Water** | | |
| 20977 | **Drain** | | |
| 20978 | **Sewer Pressure Main** | | |
| 20979 | **Non Drinking Water** | | |
| 21101 | **Vacuum Sewer** | | |
| 21792 | **Pipeline** | | DEPTH AND LOCATION POST FOR RAIL CROSSING (NOT FOR GENERAL USE) |
| 21845 | **Pipeline** | | CHAINAGE DISTANCE MARKER POST |

LABEL SCHEDULE

1 (1:1) 10 5 0 10 20 30 40 50 60 70 mm
2 (1:5) 100 50 0 100 200 300 mm
3 (1:10) 100 50 0 100 200 300 400 500 600 700 mm

| ISSUE | DATE | GRID | REVISION | DRN | REC | APPD |
|---|---|---|---|---|---|---|
| G | 11/2017 | | MARKER POST PEN DETAILS ADDED | BJ | CW | CW |
| F | 08/2016 | | RAIL CROSSING MARKER ADDED | PAM | CW | CW |
| E | 07/2016 | | PIPELINE/NAME/CHAINAGE LABEL ADDED | BJ | CW | CW |
| D | 02/2012 | | VACUUM SEWER MMR ADDED | KN | CW | PF |
| C | 03/2011 | | NOTE AND LABEL SCHEDULE AMENDED | BJ | CW | LD |
| B | 01/2010 | | NOTE 1 ADDED | KLM | NB | CW |

DESIGN SURVEY NONE | VERTICAL DATUM NONE | DES CALC N/A | NORTH POINT
ASCON SURVEY NONE | COORDINATE SYS NONE | DES CHD B MOULDEN
DES REF | DRN K MCGREGOR | Q.C. CHD C WOOLFORD

INFRASTRUCTURE DESIGN BRANCH

RECOMMENDED 18/12/2009 C WOOLFORD (SIGNED) SENIOR ENGINEER
APPROVED 18/12/2009 J DAVIES (SIGNED) PRINCIPAL ENGINEER

WATER CORPORATION
MARKER POST & SIGNAGE STANDARD DRAWINGS
PIPELINE – MARKER POST
TYPICAL DETAILS

FILE | PLAN KA76–1–2 | CAD | ISSUE G | ORIGINAL SHEET SIZE A1 | MF 21 NOV 2017

© THIS DRAWING IS THE PROPERTY OF THE WATER CORPORATION. IT SHALL NOT BE COPIED WITHOUT PERMISSION.

CAD MANAGEMENT_NOT READ ONLY\WDCS\STANDARD DRAWINGS\MANUALS\WATER RETICULATION\REVISION\KA76–001–002–01G 11:20 14/11/2017 JEFFERB1/WS26781

566
810