DocuSign Envelope ID: 4EB380FF-A918-424A-B6B8-40A5C145706B

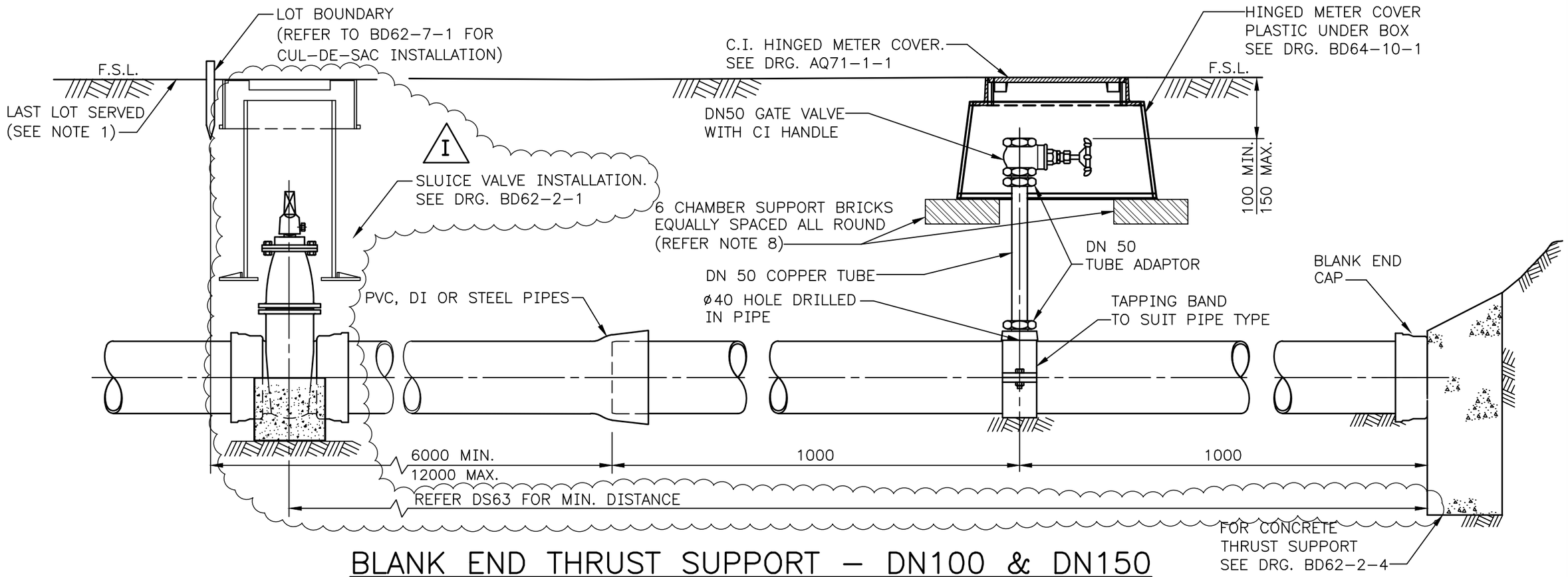

BLANK END THRUST SUPPORT – DN100 & DN150

NOTES:

1. THE FLUSHING POINT SHALL BE LOCATED BEYOND THE LAST PROPERTY SERVED, AS SHOWN. IF THIS IS IMPRACTICABLE, THE FLUSHING POINT SHOULD BE INSTALLED TO AN EQUAL STANDARD OF CONSTRUCTION ALONG THE FRONTAGE OF THE LAST PROPERTY SERVED
2. THE EXCAVATED TRENCH WITHIN 500MM OF THE INSTALLED FLUSHING POINT SHALL BE FILLED WITH SAND IN 150mm LAYERS AND EACH LAYER SHALL BE WELL COMPACTED
3. THRUST SUPPORTS ARE INTENDED TO RESIST AN ASSUMED 1200 KPA MAXIMUM THRUST AGAINST COMPACT UNDISTURBED SOIL OR WELL COMPACTED FILL MATERIAL
4. GATE VALVES SHALL BE TO WATER CORPORATION SPS 255. COPPER ALLOY FITTINGS SHALL BE TO AS 3688 AND AS 2345. GATE VALVES SHALL BE RP2/50 X RP2/50 (MMR 1813). TUBE ADAPTORS SHALL BE DN50 CAPILLARY X R2/50 (MMR 1799).
5. SLUICE VALVE, HYDRANT, METER AND STOP TAP SERVICE CHAMBERS SHALL BE SUPPORTED ON A LEVEL BED OF BRICKS WHICH HAVE BEEN FIRMLY SET ON AND INTO WELL COMPACTED FILL.
6. FOR TEMPORARY ARRANGEMENT THE UNDER BOX AND CI METER COVER MAY BE OMITTED IF APPROVED BY WATER CORPORATION. ALL TEMPORARY ARRANGEMENTS REQUIRE USE OF MARKER POST AS PER KA76-1-1 BEING FLUSHING POINT MMR 20984
7. WELL COMPACTED FILL SHALL PROVIDE A FILL PENETRATION RESISTANCE.
   (a) OF AT LEAST 7 BLOWS PER 300mm OF PENETRATION, WHEN TESTED IN ACCORDANCE WITH AS1289.6.3.3, FOR SAND OR
   (b) EQUIVALENT TO 92% MODIFIED DRY DENSITY, WHEN TESTED IN ACCORDANCE WITH AS1289.5.4.1, FOR GRAVEL.
8. SUPPORT BRICKS TO BE SOLID 230x115x75 FIRECLAY TO AS1617.

ISSUE	DATE	GRID	REVISION	DRN	REC	APPD
I	12/2021		SLUICE VALVE INSTALLATION ADDED	FR	AA	JD
H	09/2017		NOTES AMENDED	PAM	CW	CW
G	07/2013		TIMBER SERVICE CHAMBER REPLACED BY PLASTIC UNDER BOX	BJ	CW	DVDN
F	01/2004		THRUST SUPPORT DETAILS AND NOTE 5 AMENDED	KLM	MM	JD
E	11/2000	–	NOTES AND DETAILS REVISED	PAM	K.R.	K.R.

F.S.L. = FINISHED SURFACE LEVEL

SCALE: DIAGRAMATIC

DES CALC W 7087
DES CHD 2/94
DRN F. RACCUIA
Q.C. CHD P. WINFIELD

RECOMMENDED 30/06/1994
P.M. WINFIELD (SIGNED)
FOR SUPERVISING ENGINEER

APPROVED 30/06/1994
D.S. BROOKS (SIGNED)
FOR MANAGER W.S.P. & DESIGN

WATER CORPORATION

WATER RETICULATION
STANDARD DRAWINGS
FLUSHING POINT INSTALLATION DN100 & DN150
TYPICAL ARRANGEMENT

FILE
PROJECT
PLAN BD62-2-2
CAD
ISSUE I

ORIGINAL SHEET SIZE A3

MF

283
394

© THIS DRAWING IS THE PROPERTY OF THE WATER CORPORATION. IT SHALL NOT BE COPIED WITHOUT PERMISSION.

CAD MANAGEMENT_NOT READ ONLY\WDCS\STANDARD DRAWINGS\DS63\CAD\BD62\BD62-002-002-01I 11:09 16/12/2021 RACCUIFO/NB46086