DocuSign Envelope ID: 4EB380FF-A918-424A-B6B8-40A5C145706B

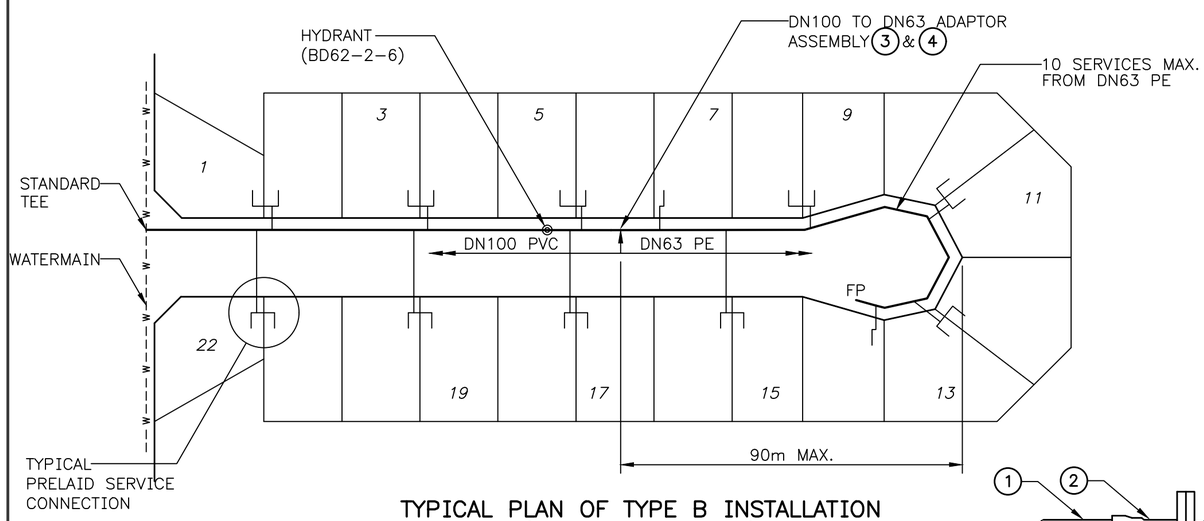


## TYPICAL PLAN OF TYPE B INSTALLATION
**(MORE THAN 10 SERVICES)**

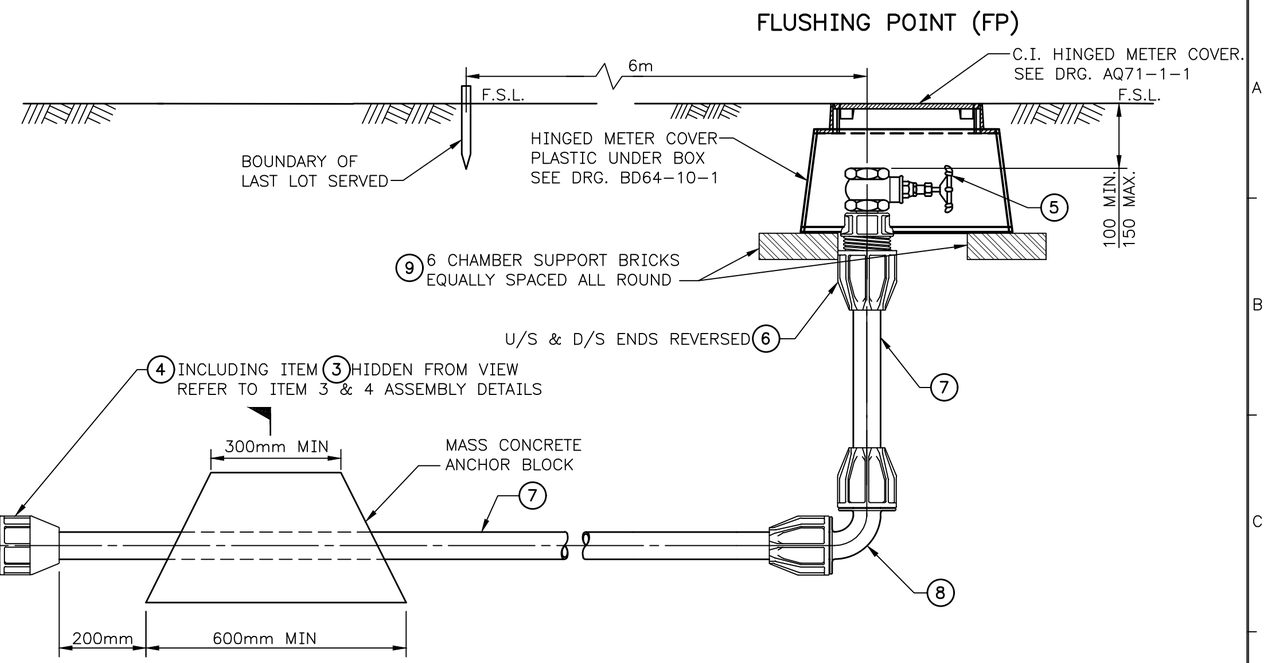


## GENERAL ARRANGEMENT
**(SERVICE CONNECTIONS NOT SHOWN)**

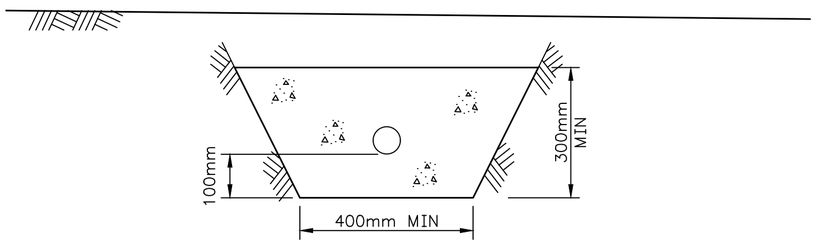


## SECTION A

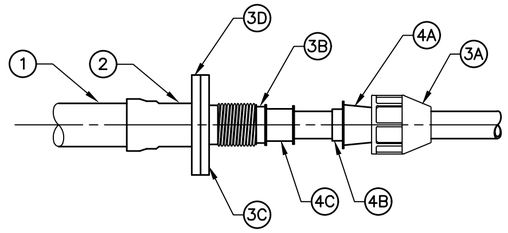


| | | |
|---|---|---|
| MARK 3 | 3A | DN110 COMPRESSION NUT |
| | 3B | DN110 BUSH AND O RING |
| | 3C | DN100 NICKEL CADMIUM PLATED STEEL BACKING RING |
| | 3D | DN100 PP FLANGED SPIGOT (END THREADED FOR COMPRESSION NUT) |
| | 3E | DN110 SPLIT RING (TO BE DISCARDED) |
| MARK 4 | 4A | DN110 TO DN63 NUT REDUCER |
| | 4B | DN63 SPLIT RING |
| | 4C | REDUCING ADAPTOR WITH DN63 SEAL RING |

### TABLE OF MATERIALS AND STANDARDS

| MARK | PIPE/FITTING DESCRIPTION | MATERIAL | UPSTREAM END | DOWNSTREAM END | STANDARD | MMR |
|---|---|---|---|---|---|---|
| 9 | 230x115x75 Solid Brick | Fire Clay | N/A | N/A | AS1617 | 2222 |
| 8 | DN63 PE 90° Elbow | PP | DN63 PE c/w O Ring Seal | DN63 PE c/w O Ring Seal | AS/NZS4129 | 13990 |
| 7 | DN63 Polyethylene Pipe | PE100 (NOTE 2) | #N/A | #N/A | AS/NZS4130 | 22800 |
| 6 | DN63 PE End Connector/Adaptor | PP | DN63 PE c/w O Ring Seal | R 2/50 | AS/NZS4129 | 13989 |
| 5 | DN50 Gate Valve c/w CI Handwheel | Copper Alloy | RP 2/50 | RP 2/50 | SPS 255 | 1813 |
| 4 | DN110 x DN63 Reducing Assembly | PP | DN110 to DN63 Nut Reducer | Reducing Adaptor with DN63 Ring Seal | AS/NZS4129 | 20171 |
| 3 | DN100 Flange x DN110 PE Compression Socket Adaptor | PP | DN100 Flange c/w backing ring | DN110 PE c/w O Ring Seal | AS/NZS4331.1 (Flange) AS/NZS4129 (Fitting) | 20170 |
| 2 | DN100 Flange To Socket Connector | DI | DN100 Socket | DN100 Flange | AS/NZS2280 | 13611 |
| 1 | DN100 Reticulation Watermain | PVC | #N/A | #N/A | AS/NZS 1477 Series 2 | 19831 |

J

## ASSEMBLY OF ITEM 3 AND 4

NOTES:

1. EACH TAPPING BAND SHALL BE POSITIONED AT LEAST 300MM CLEAR OF ANY WATERMAIN JOINT OR FITTING
2. PE PIPE SHALL:
   (a) HAVE AN SDR OF 9 OR LOWER;
   (b) BE DISINFECTION RESISTANT AS DEFINED IN SPS125;
   (c) BE HSCR AS PER PIPA POP016;
   (d) COMPLY WITH AS 4130; AND
   (e) BE MANUFACTURED FROM A RESIN LISTED IN THE STRATEGIC PRODUCT REGISTER.
3. THREADED PIPE FITTING ENDS SHALL BE SERIES R (EXTERNALLY THREADED AND SERIES RP (INTERNALLY THREADED) TO AS ISO 7.1
4. COPPER ALLOY GATE VALVES SHALL BE TO WATER CORPORATION SPECIFICATION SPS 255.
5. SLUICE VALVE, HYDRANT, METER AND STOP TAP SERVICE CHAMBERS SHALL BE SUPPORTED ON A LEVEL BED OF BRICKS WHICH HAVE BEEN FIRMLY SET ON AND INTO WELL COMPACTED FILL.
6. WELL COMPACTED FILL SHALL PROVIDE A FILL PENETRATION RESISTANCE.
   (a) OF AT LEAST 7 BLOWS PER 300mm OF PENETRATION, WHEN TESTED IN ACCORDANCE WITH AS1289.6.3.3, FOR SAND OR
   (b) EQUIVALENT TO 92% MODIFIED DRY DENSITY, WHEN TESTED IN ACCORDANCE WITH AS1289.5.4.1, FOR GRAVEL.
7. PIPE FITTINGS JOINING PE PIPE SHALL BE TO AS/NZS4129.

| ISSUE | DATE | GRID | REVISION | DRN | REC | APPD |
|---|---|---|---|---|---|---|
| J | 12/2021 | | MMR FOR MARK 1 AMENDED | FR | AA | JD |
| I | 05/2021 | | MARK 7 IN TABLE AND NOTE 2 AMENDED. NOTE 7 ADDED | ME | AA | JD |
| H | 09/2017 | | TYPE B INSTALLATION DETAILS AMENDED, PLASTIC UNDERBOX ADDED, ITEM 9 ADDED | BJ | CW | CW |
| G | 09/2012 | | NOTES AND TABLE AMENDED | BJ | CW | KR |
| F | 10/2003 | | GATE VALVE REMOVED & DN100 TO DN63 ADAPTOR & ANCHOR BLOCK ADDED | KLM | MM | JD |
| E | 11/2000 | | NOTES REVISED TABLE OF MATERIALS ADDED | PAM | K.R. | K.R. |

F.S.L. = FINISHED SURFACE LEVEL

SCALE: DIAGRAMMATIC

| | | | |
|---|---|---|---|
| SURVEY BOOKS | VERTICAL DATUM AHD | DES CALC W 7087 | NORTH POINT |
| | COORDINATE SYS UNKNOWN | DES CHD 2/94 | |
| | DES REF | DRN F. RACCUIA | |
| | | Q.C. CHD P. WINFIELD | |

RECOMMENDED 30/06/1994
P.M. WINFIELD (SIGNED)
FOR SUPERVISING ENGINEER

APPROVED 30/06/1994
D.S. BROOKS (SIGNED)
FOR MANAGER W.S.P. & DESIGN

WATER CORPORATION

WATER RETICULATION
STANDARD DRAWINGS
PE MAIN LAYING INSTALLATION FOR CUL-DE-SAC
TYPE B – MORE THAN 10 SERVICES

FILE
PROJECT
PLAN BD62-7-3
CAD
ISSUE J
ORIGINAL SHEET SIZE A2
MF

400
566

© THIS DRAWING IS THE PROPERTY OF THE WATER CORPORATION. IT SHALL NOT BE COPIED WITHOUT PERMISSION.

CAD MANAGEMENT_NOT READ ONLY\WDCS\STANDARD DRAWINGS\DS63\CAD\BD62\BD62-007-003-01J 11:09 16/12/2021 RACCUIF0/NB46086