DocuSign Envelope ID: 0C4A1C45-BB6E-4BE4-9477-A91936775E2D

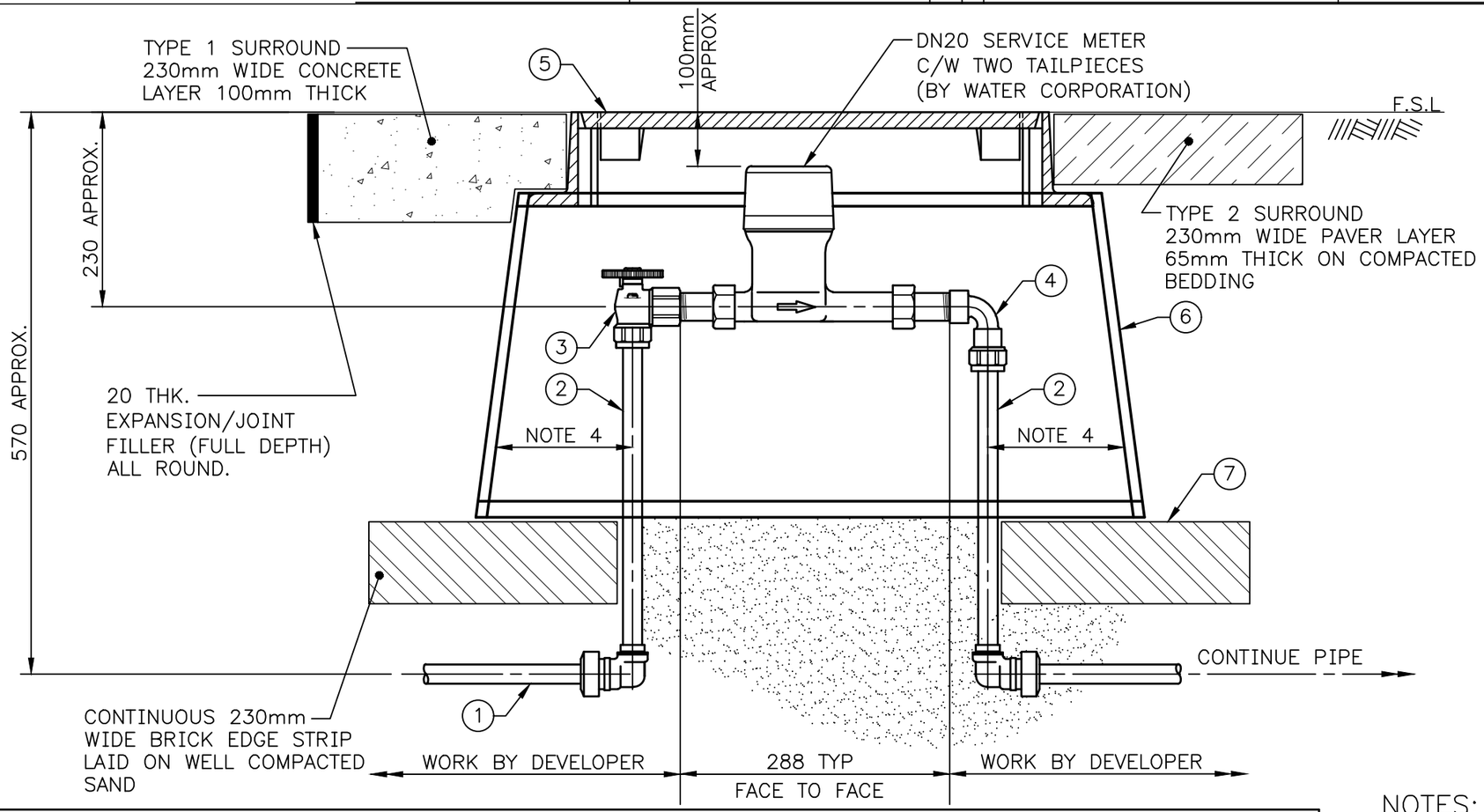

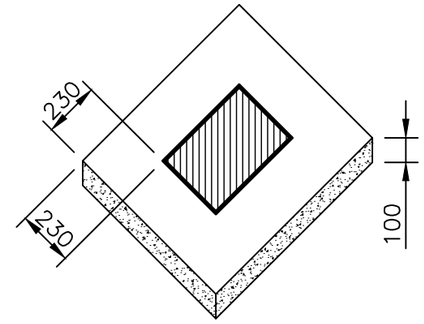

TYPE 1 SURROUND ARRANGEMENT
N.T.S

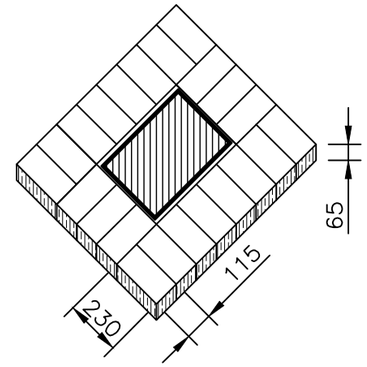

TYPE 2 SURROUND ARRANGEMENT
N.T.S

TABLE OF MATERIALS AND STANDARDS

ITEM	PIPE/FITTING DESCRIPTION	MATERIAL	UPSTREAM END	DOWNSTREAM END	STANDARD	MMR
1	OD25 POLYETHYLENE PIPE	PE100 (NOTE 5)	N/A	N/A	AS/NZS4130	22799
2	DN20 RISER ASSEMBLY	COPPER AND COPPER ALLOY	D OD25 PE C/W O-RING SEAL	R ¾/20	BD22-5-8	21165
3	DN20 METAL BALL VALVE	COPPER ALLOY	RP ¾/20	RP ¾/20	SPS 254	19835
4	DN20xDN20 90° ELBOW	COPPER ALLOY	RP ¾/20	RP ¾/20	AS/NZS4129	4915
5	INSPECTION COVER & FRAME	CI	N/A	N/A	AQ71-1-1	2024
6	PLASTIC UNDERBOX	GRP	N/A	N/A	BD64-10-1	21099
7	230x115x75 SOLID BRICK	FIRECLAY	N/A	N/A	AS1617	2222

NOTES:

1. ALL DIMENSIONS ARE IN MILLIMETRES.
2. METER DISPLAY SHALL BE LOCATED AT THE CENTRE OF THE UNDERBOX AS VIEWED FROM ABOVE.
3. DEVELOPER TO INSTALL TEMPORARY STANDPIPE ASSEMBLY. REFER DRAWING BD62-10 SERIES.
4. RISER PIPE TO BE EQUIDISTANT FROM EDGE OF BOX.
5. PE PIPE SHALL:
   (a) HAVE AN SDR OF 9 OR LOWER;
   (b) BE DISINFECTION RESISTANT AS DEFINED IN SPS125;
   (c) BE HSCR AS PER PIPA POP016;
   (d) COMPLY WITH AS 4130; AND
   (e) BE MANUFACTURED FROM A RESIN LISTED IN THE STRATEGIC PRODUCT REGISTER.

ISSUE	DATE	GRID	REVISION	DRN	REC	APPD
D	01/2024		ITEM 2 MATERIAL CHANGED TO COPPER ALLOY	ME	JA	AA
C	05/2021		ITEM 1 IN TABLE AMENDED. NOTE 5 ADDED	ME	AA	JD
B	04/2019		REVISED AS CLOUDED	MD	AA	JD

(1:5 AT A3)
100 50 0 100 200 300 mm

DES CALC
H. AITKEN
DES CHD
C. WOOLFORD
DRN
A. CLEAVER
Q.C. CHD
P. MIRCO

RECOMMENDED 01/07/2013
C. WOOLFORD (SIGNED)
SENIOR ENGINEER, WDC&S

APPROVED 01/07/2013
P.J. FINLAY (SIGNED)
PRINCIPAL ENGINEER, WDC&S

WATER CORPORATION

WATER RETICULATION
STANDARD DRAWINGS
BELOW GROUND DN20 WATER SERVICE
TYPICAL ARRANGEMENT

FILE
PLAN
CAD
ISSUE
PROJECT
BD62-2-9
D

ORIGINAL SHEET SIZE
A3
MF

283
394

© THIS DRAWING IS THE PROPERTY OF THE WATER CORPORATION. IT SHALL NOT BE COPIED WITHOUT PERMISSION.

CAD MANAGEMENT_NOT READ ONLY\WDCS\STANDARD DRAWINGS\DS63\DS63 UPDATES 2024\BD62-002-009-01D 09:26 22/01/2024 EDWARDM3/NB41253