DocuSign Envelope ID: 4EB380FF-A918-424A-B6B8-40A5C145706B

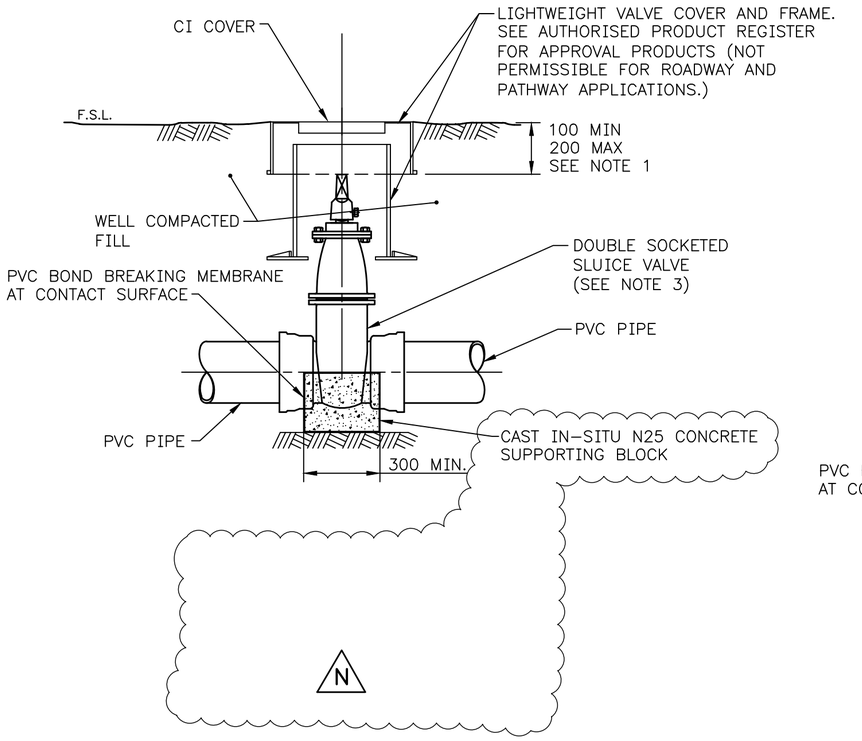

DETAIL 1: NON-TRAFFICABLE APPLICATIONS

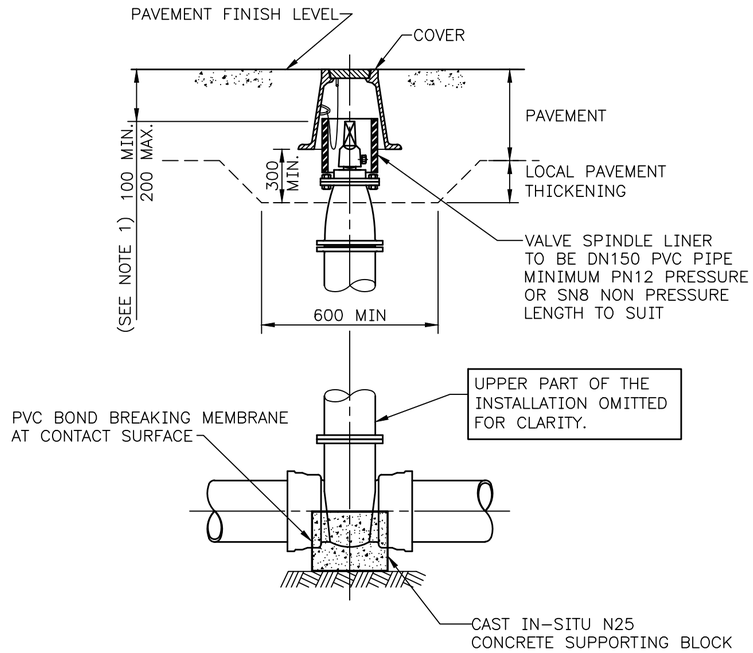

DETAIL 2: TRAFFICABLE APPLICATIONS

SLUICE VALVE INSTALLATION

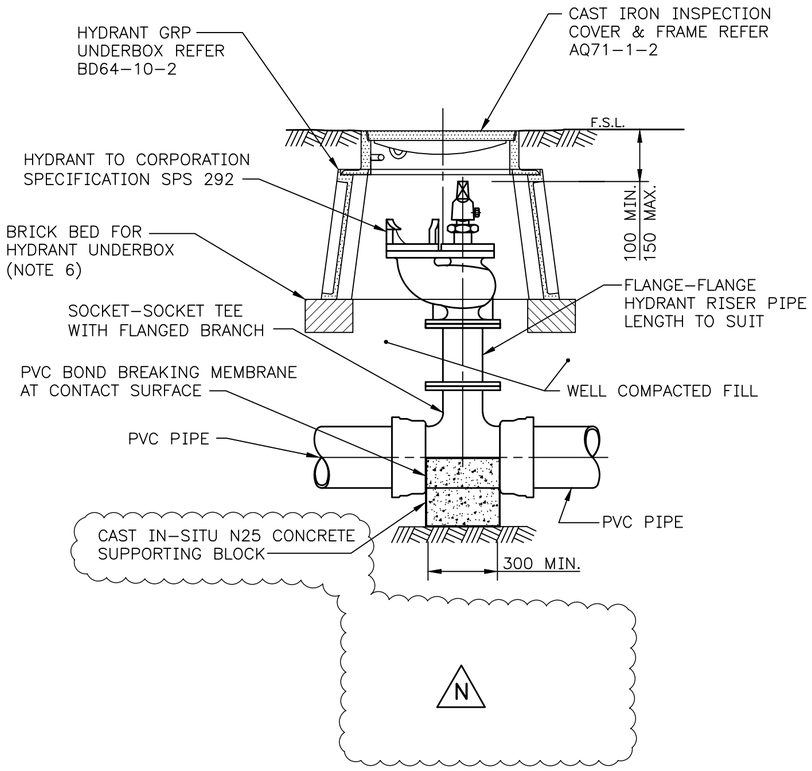

HYDRANT INSTALLATION

NOTE :

1. VALVES SHALL BE PROVIDED WITH EXTENSION SPINDLES AS NECESSARY.
2. EXTENSION SPINDLES SHALL COMPLY WITH DRAWING AQ71-3-1.
3. THE EXCAVATED TRENCH WITHIN 500mm OF THE INSTALLED SLUICE VALVE OR HYDRANT SHALL BE BACKFILLED WITH SAND IN 150mm LAYERS AND FIRMLY TAMPED.
4. FLANGED VALVES AND FLANGED MATCHING PIECES IN ACCORDANCE WITH THE PIPE FITTINGS MANUAL SHALL BE REQUIRED ON STEEL RETICULATION PIPELINES
5. WHERE SLUICE VALVES ARE UNAVOIDABLY LOCATED IN PAVED OR TRAFFICABLE AREAS, THE PAVEMENT MATERIAL SHALL BE THICKENED AND WELL COMPACTED AS INDICATED IN DETAIL 2.
6. SLUICE VALVE, HYDRANT, METER AND STOP TAP SERVICE CHAMBERS SHALL BE SUPPORTED ON A LEVEL BED OF SIX SOLID BRICKS (230x115x75) TO AS1617 WHICH HAVE BEEN FIRMLY SET ON AND INTO WELL COMPACTED FILL.
7. WELL COMPACTED FILL SHALL PROVIDE A FILL PENETRATION RESISTANCE:
   (a) OF AT LEAST 7 BLOWS PER 300mm OF PENETRATION, WHEN TESTED IN ACCORDANCE WITH AS1289.6.3.3, FOR SAND OR
   (b) EQUIVALENT TO 92% MODIFIED DRY DENSITY, WHEN TESTED IN ACCORDANCE WITH AS1289.5.4.1, FOR GRAVEL.
8. PREFERRED ORIENTATION OF HYDRANT COVER & FRAME IS LONG SIDE PARALLEL TO ROAD AND WRITING TO BE VIEWED WHEN APPROACHED FROM ROADSIDE.

ISSUE	DATE	GRID	REVISION	DRN	REC	APPD
N	12/2021		ALTERNATIVE INSTALLATION DELETED	FR	AA	JD
M	10/2017		NEW TYPE OF HYDRANT BOX ADDED	CJW	CW	JD
L	07/2013		VALVE SPINDLE LINER NOTE AMENDED	BJ	CW	DVDN
K	05/2013		VALVE SPINDLE LINER NOTE ADDED	BJ	CW	PF
J	04/2012		COVER DEPTH ADDED & NOTES REVISED	AC	CW	PF
I	06/2007		CLEARANCE REQUIREMENTS BETWEEN SPINDLE & COVER ADDED	AC	JO	PF
H	12/2006		'TABLE 3.1 FOR APPROVED PRODUCTS' REVISED TO 'TABLE 3.2 FOR AUTHORISED PRODUCTS'	AC	MM	JD
G	11/2006		HYDRANT CHAMBER/COVER REPLACED WITH LIGHTWEIGHT HYDRANT BOX	AC	MM	JD
F	09/2005	2C	LIGHTWEIGHT COVER & FRAME FOR NONTRAFICABLE APPLICATION	DMO	MM	JD
E	11/2000		DRAWING NOTES REVISED	PAM	K.R.	K.R.

SCALE: DIAGRAMATIC

DESIGN SURVEY NONE	VERTICAL DATUM AHD / COORDINATE SYS NONE	DES CALC / DES CHD	NORTH POINT	RECOMMENDED 30/06/1994 P.M. WINFIELD (SIGNED) FOR SUPERVISING ENGINEER
ASCON SURVEY NONE	DES REF W 7087 2/94	DRN F. RACCUIA / Q.C. CHD P. WINFIELD		APPROVED 30/06/1994 D.S. BROOKS (SIGNED) FOR MANAGER W.S.P. & DESIGN

WATER CORPORATION

WATER RETICULATION
STANDARD DRAWINGS
SLUICE VALVE AND HYDRANT
TYPICAL INSTALLATION DETAILS

FILE | PLAN BD62-2-1 | CAD | ISSUE N | ORIGINAL SHEET SIZE A2
PROJECT | MF

400
566

© THIS DRAWING IS THE PROPERTY OF THE WATER CORPORATION. IT SHALL NOT BE COPIED WITHOUT PERMISSION.

CAD MANAGEMENT_NOT READ ONLY\WDCS\STANDARD DRAWINGS\DS63\CAD\BD62\BD62-002-001-01N 11:09 16/12/2021 RACCUIFO/NB46086