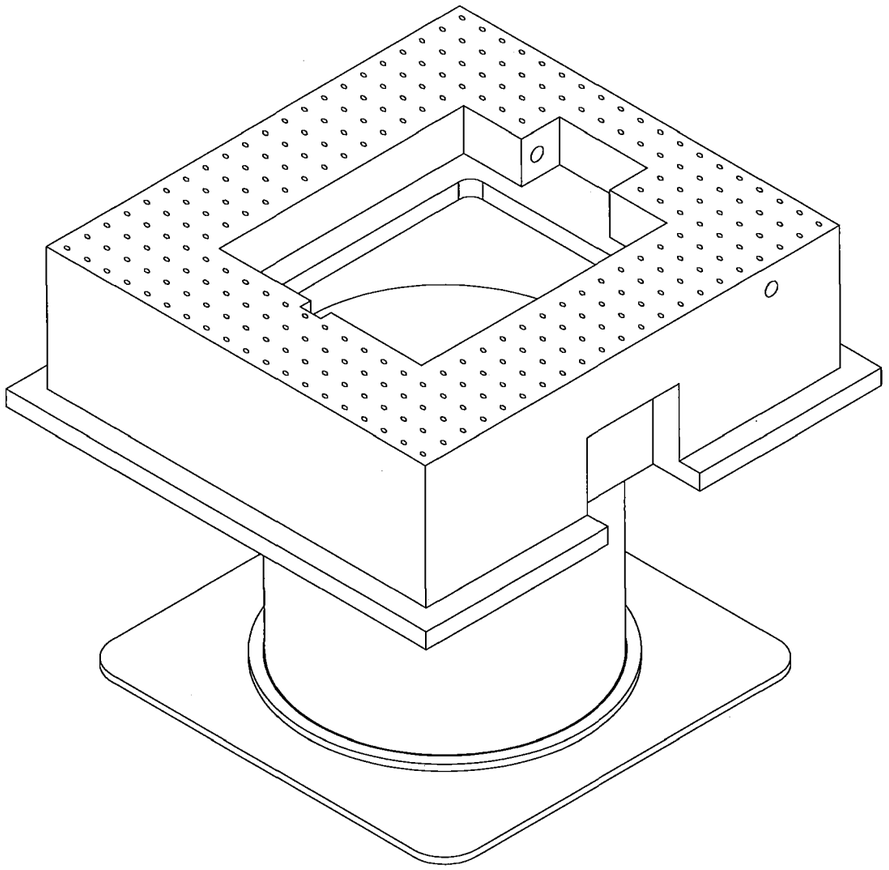

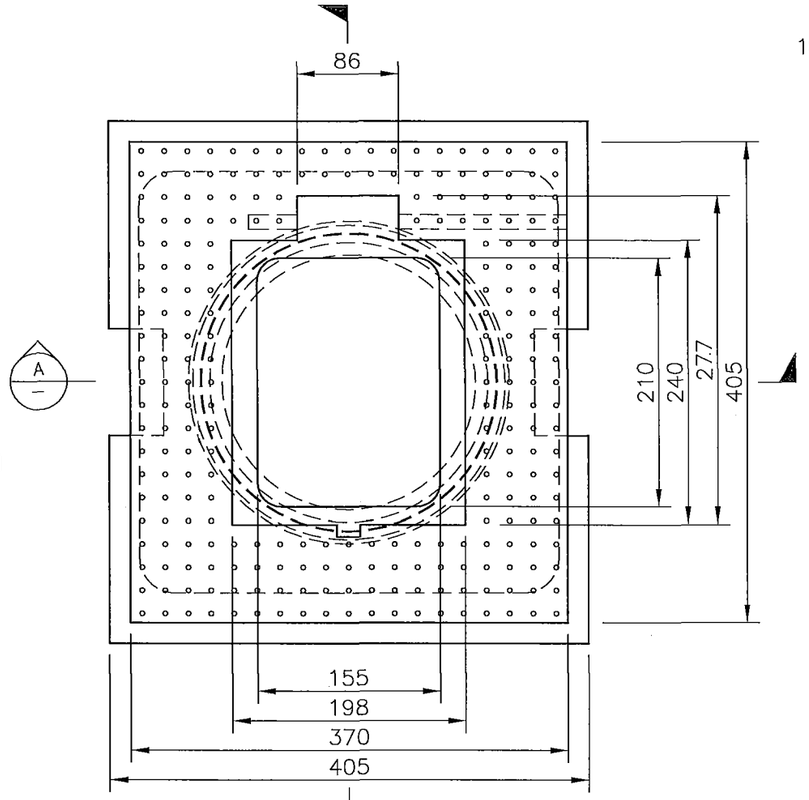

(1:5)
100 50 0 100 200 300 mm

NOTE:
SEE AQ71-1-8 FOR LID DETAILS

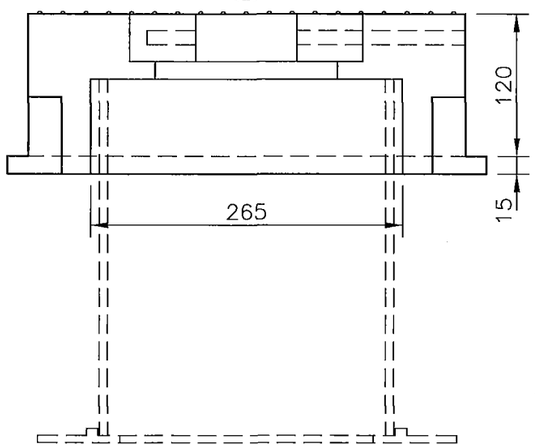

SECTION A

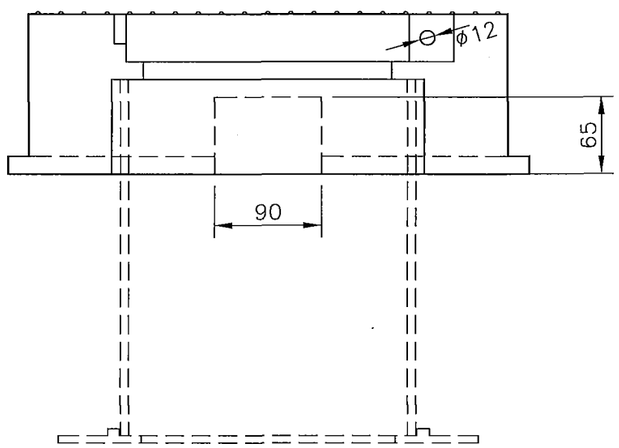

SECTION B

MMR (KIT)	DESCRIPTION
20313	COMPRISES OF THREE COMPONENTS 1. CAST IRON BASE PLATE 2. PVC SHROUD PIPE 3. PLASTIC FRAME AND CAST IRON HINGED LID (MMR 22106) B

NOTE: PRODUCT SUITABLE FOR ROAD VERGE INSTALLATIONS ONLY

ISSUE	DATE	GRID	REVISION	DRN	REC	APPD
B	03/2018		COMPONENT 3 DESCRIPTION AMENDED	JMS	CW	CW

DES CALC
DES CHD
DRN K MCGREGOR
Q.C. CHD P MIRCO

RECOMMENDED 20/03/2011
C WOOLFORD (SIGNED)
SENIOR ENGINEER, WDCS

APPROVED 20/03/2011
P FINLAY (SIGNED)
PRINCIPAL ENGINEER, WDCS

WATER CORPORATION

WATER RETICULATION – STANDARD DRAWINGS
MISCELLANEOUS CAST IRON ITEMS
GATE VALVE SURROUND (LIGHTWEIGHT)

FILE
PROJECT
PLAN AQ71-1-7
CAD
ISSUE B

ORIGINAL SHEET SIZE A3

MF 23 MAR 2018

283
394

© THIS DRAWING IS THE PROPERTY OF THE WATER CORPORATION. IT SHALL NOT BE COPIED WITHOUT PERMISSION.

CAD MANAGEMENT_NOT READ ONLY\WDCS\STANDARD DRAWINGS\MANUALS\WATER RETICULATION\AQ71-001-007-01B 10:55 21/03/2018 saundej0/WS26782