DocuSign Envelope ID: 0C4A1C45-BB6E-4BE4-9477-A91936775E2D

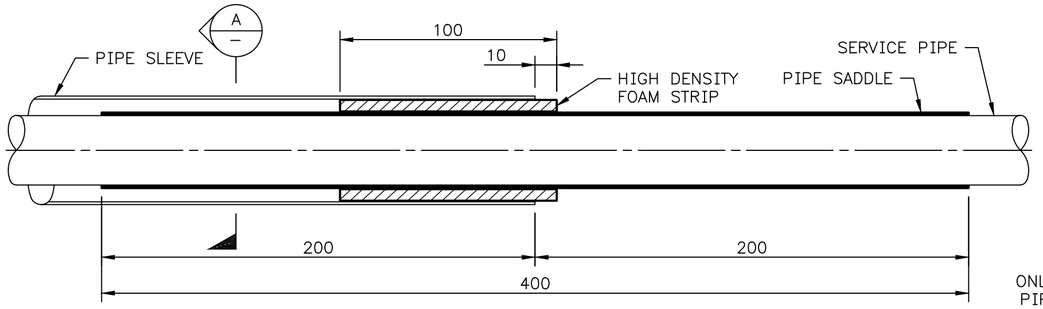

TYPICAL SEALING OF PIPE SLEEVE END

NOTE:
ONLY APPLIES WHEN PIPE SLEEVE USED.
(REFER NOTE 11)

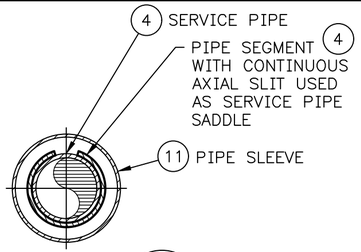

SECTION A – TYPICAL SERVICE PIPE SADDLE

NOTE:
ONLY APPLIES WHEN PIPE SLEEVE USED.
(REFER NOTE 11)

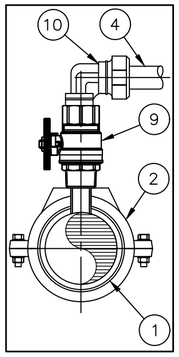

CONFIGURATION 'B'

DN25 PRELAID DRY TAPPED ONLY WHERE CONFIGURATION 'A' PROVES IMPRACTICABLE

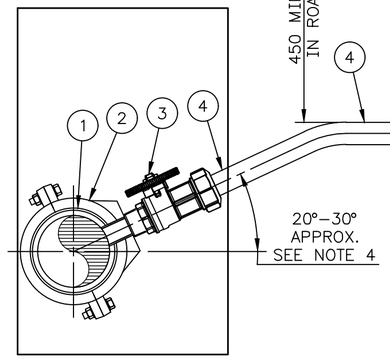

CONFIGURATION 'A'

DN25 PRELAID DRY TAPPED PREFERRED

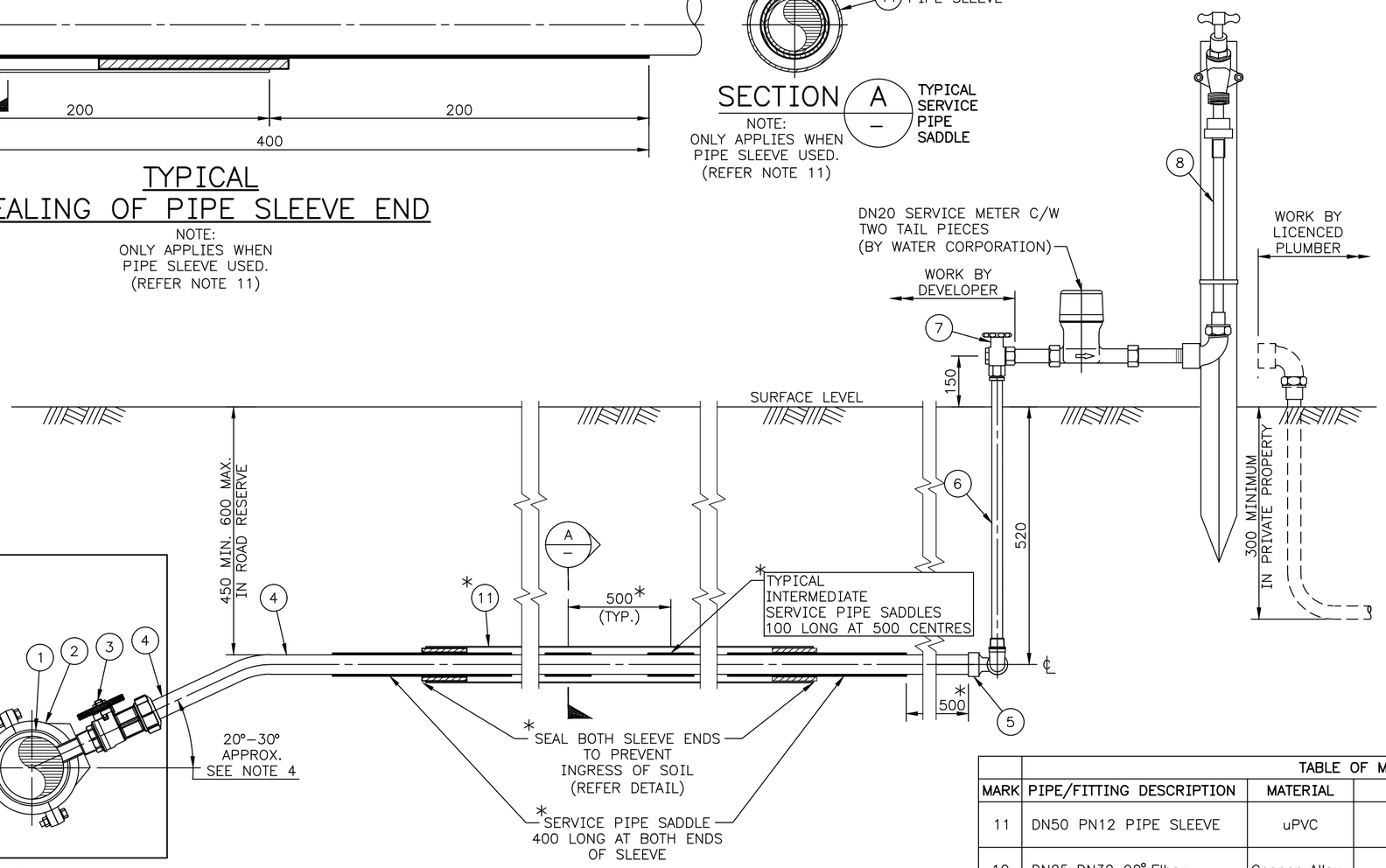

ELEVATION

NOTE:
ITEMS MARKED WITH "*" ONLY APPLY WHEN PIPE SLEEVE USED.
(REFER NOTE 11)

NOTES:

1. SERVICE TAPPING HOLES DRILLED IN WATERMAINS SHALL BE 24.5mm IN DIAMETER FOR DN25 TAPPINGS.
2. EACH WATERMAIN TAPPING HOLE, TAPPING BOSS SERVICE TAPPING, TAILPIECE AND DOWNSTREAM SERVICE OFFTAKE FITTING SHALL BE INSTALLED CONCENTRICALLY.
3. ANTI–TUBERCULATION TAILPIECES SHALL BE INSTALLED WHEREVER TAPPING BANDS ARE INSTALLED ON UNLINED METALLIC WATERMAINS REFER BD22–11–5.
4. INSTALL PE SERVICE PIPE AT ANGLE TO ACHIEVE MINIMUM 150mm CLEARANCE FROM OTHER UTILITIES.
5. PE PIPE SHALL:
   (a) HAVE AN SDR OF 9 OR LOWER;
   (b) BE DISINFECTION RESISTANT AS DEFINED IN SPS125;
   (c) BE HSCR AS PER PIPA POP016;
   (d) COMPLY WITH AS 4130; AND
   (e) BE MANUFACTURED FROM A RESIN LISTED IN THE STRATEGIC PRODUCT REGISTER.
6. EACH TAPPING BAND SHALL BE POSITIONED AT LEAST 300mm CLEAR OF ANY WATERMAIN JOINT OR FITTING.
7. PIPE FITTINGS FOR MECHANICAL JOINTING OF PE PIPE AND INCORPORATING O RING SEALS SHALL BE TO AS/NZS 4129
8. AND SHALL BE RATED PN16 OR HIGHER.
9. THREADED PIPE FITTING ENDS SHALL BE SERIES R (EXTERNALLY THREADED) AND SERIES RP (INTERNALLY THREADED) TO AS ISO 7.1.
10. THE SERVICE INSTALLATION WORK SHALL BE IN TWO STAGES. IN THE FIRST STAGE, THE CORPORATION WILL INSTALL EACH SERVICE METER AND TAILPIECE ASSEMBLY AND THE TEMPORARY BUILDER'S STANDPIPE ASSEMBLY. IN THE SECOND STAGE, THE STANDPIPE ASSEMBLY SHALL BE REMOVED AND THE INTERNAL PROPERTY SERVICE SHALL BE INSTALLED BY A LICENCED PLUMBER.
11. EACH PRELAID DRY–TAPPED SERVICE SHALL BE CONNECTED TO THE WATERMAIN, PRESSURE TESTED AND DISINFECTED AT THE TIME OF WATERMAIN INSTALLATION. EACH CONNECTED WATERMAIN AND SERVICE INSTALLATION SHALL BE HANDED OVER TO THE CORPORATION IN LIVE OPERATIONAL CONDITION.
12. SLEEVING OF SERVICE REQUIRED ONLY NORTH OF 26° LATITUDE.

TABLE OF MATERIALS AND STANDARDS

MARK	PIPE/FITTING DESCRIPTION	MATERIAL	UPSTREAM END	DOWNSTREAM END	STANDARD	MMR
11	DN50 PN12 PIPE SLEEVE	uPVC	#N/A	#N/A	SPS115	7836
10	DN25xDN32 90° Elbow	Copper Alloy	R 1/25	DN32 PE c/w O Ring Seal	AS/NZS4129	21103
9	DN25 Inline Metal Ball Valve	Copper Alloy	R 1/25	RP 1/25	SPS 251	19422
8	DN20 Standpipe Assembly	Various	#N/A	#N/A	BD62–10–1	17001
7	DN20 Metal Ball Valve	Copper Alloy	RP ¾/20	RP ¾/20	SPS 254	19835
6	DN20 Copper Riser Assembly	Copper Alloy	DN25 PE c/w O Ring Seal	R ¾/20	BD22–5–8	21150
5	DN25 PE Tee c/w DN32 Branch	J Copper Alloy	DN32 PE c/w O Ring Seal	DN25 PE c/w O Ring Seal (2 No.)	AS/NZS4129	22710 J
4	OD32 Polyethylene Pipe	PE100	#N/A	#N/A	AS/NZS4130	22799
3	DN25 Inline Metal Ball Valve	Copper Alloy	R 1/25	DN32 PE c/w O Ring Seal	SPS 251	21865
2	Tapping Band tapped DN25	To suit pipe	#N/A	RP 1/25	DS63 Table 3.1	
1	Reticulation Watermain	PVC/MS/CI DI/AC/CU	#N/A	#N/A	DS63 Table 3.1	

SCALE: DIAGRAMMATIC

ISSUE	DATE	GRID	REVISION	DRN	REC	APPD
J	01/2024		ITEM 5 MATERIAL AND MMR UPDATED	ME	JA	JA
I	05/2021		MARK 4 IN TABLE AND NOTE 5 AMENDED.	ME	AA	JD
H	04/2019		SLEEVE ADDED, NOTES + COMPONENTS UPDATED	MD	AA	JD
G	04/2013		RISER ASSEMBLY & NOTES AMENDED – ITEMS 8–10 ADDED	BJ	CW	DVDN
F	09/2012		TABLE, NOTES & CONFIGURATIONS AMENDED	BJ	CW	KR
E	06/2012		WATER METER UPDATED	BJ	CW	PF

SURVEY BOOKS	VERTICAL DATUM AHD	DES CALC F. FILIPOVIC	NORTH POINT	RECOMMENDED 21/11/2000 K. RODDY FOR SUPERVISING ENGINEER
	COORDINATE SYS NONE	DES CHD P. CHANG		APPROVED 21/11/2000 J.C. BOND FOR MANAGER I.D. BRANCH
	DES REF	DRN F. FILIPOVIC Q.C. CHD P. CHANG		

WATER CORPORATION

WATER RETICULATION
STANDARD DRAWINGS
DN25 WATER SERVICE (OD32 PE PIPE)
DRY TAPPED & UNDER PRESSURE ARRANGEMENTS

FILE | PROJECT | PLAN BD62–8–8 | CAD | ISSUE J | ORIGINAL SHEET SIZE A2 | MF

© THIS DRAWING IS THE PROPERTY OF THE WATER CORPORATION. IT SHALL NOT BE COPIED WITHOUT PERMISSION.

CAD MANAGEMENT_NOT READ ONLY\WDCS\STANDARD DRAWINGS\DS63\DS63 UPDATES 2024\BD62–008–008–01J 09:26 22/01/2024 EDWARDM3/NB41253

400
566