DocuSign Envelope ID: 0C4A1C45-BB6E-4BE4-9477-A91936775E2D

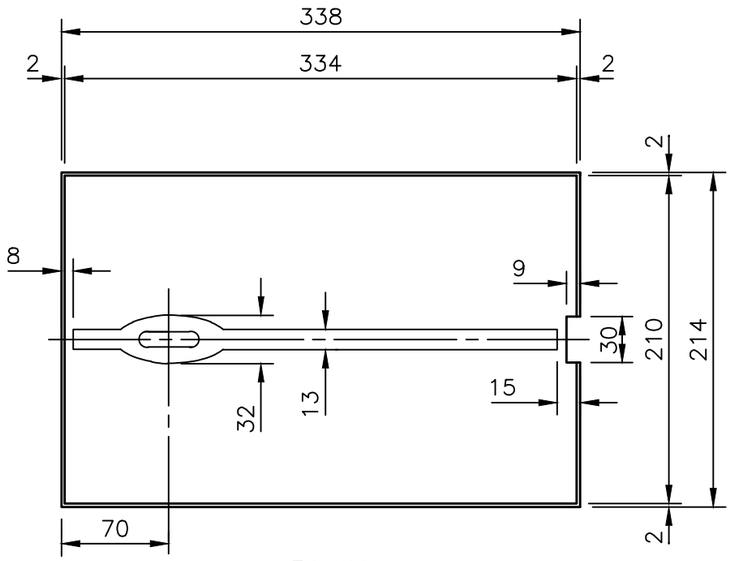

PLAN

DETAIL OF LID UNDERSIDE

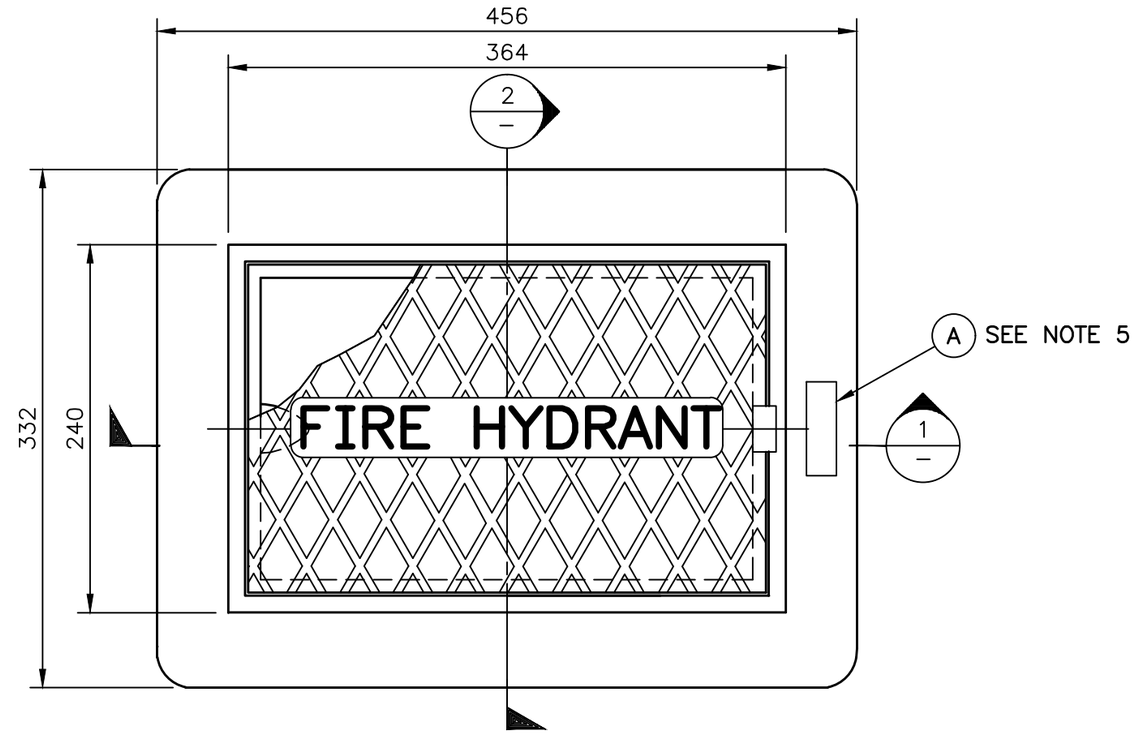

PLAN

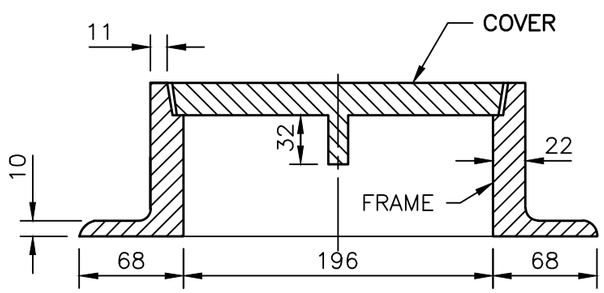

SECTION 2 / –

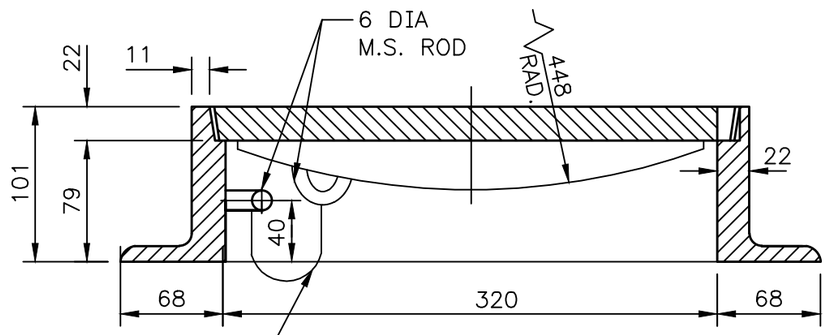

HOT DIP GALVANISED M5 STEEL CHAIN NOMINAL LENGTH 300mm (16 NOMINAL SIZE LINKS) FITTED USING 2 TACK WELDED M4 QUICK LINKS.

SECTION 1 / –

NOTE :

1. LETTERING AND DIAMOND PATTERN ON COVER TO BE RAISED 2 ± 0.5mm.
2. MATERIAL – CAST GREY IRON TO AS 1830–220.
3. BITUMEN COATING TO ALL SURFACES TO AS/NZS 3750.4
4. ITEM TO BE FREE OF BURRS AND SHARP EDGES.
5. (G) MATERIAL MASTER RECORD (MMR) No. TO BE INDELIBLY MARKED ON SURFACE AT NOMINATED LOCATION. MMR No. 2026
6. EMBOSSED MMR MARKINGS SHALL BE RAISED NO HIGHER THAN 1.5mm OFF GENERAL CASTING SURFACES.

ISSUE	DATE	GRID	REVISION	DRN	REC	APPD
G	01/2024		NOTE 5 AMENDED	ME	JA	
F	11/2000		CHAIN DETAILS AND NOTE ADDED	PAM	K.R.	K.R.

SCALE : DIAGRAMMATIC

DES CALC
W 7087
DES CHD

DRN
F. RACCUIA

Q.C. CHD
P. WINFIELD

RECOMMENDED 30/06/1994
P.M. WINFIELD (SIGNED)
FOR SUPERVISING ENGINEER

APPROVED 30/06/1994
D.S. BROOKS (SIGNED)
FOR MANAGER W.S.P. & DESIGN

WATER CORPORATION

WATER RETICULATION – STANDARD DRAWINGS
MISCELLANEOUS CAST IRON ITEMS
MISCELLANEOUS CAST IRON ITEMS
HYDRANT – INSPECTION COVER & FRAME

FILE
PROJECT
PLAN AQ71–1–2
CAD
ISSUE G

ORIGINAL SHEET SIZE A3

MF

283
394

© THIS DRAWING IS THE PROPERTY OF THE WATER CORPORATION. IT SHALL NOT BE COPIED WITHOUT PERMISSION.

VNTJT1–38\INFRSTDEV\CAD MANAGEMENT_NOT READ ONLY\WDCS\STANDARD DRAWINGS\DS63\DS63 UPDATES 2024\AQ71–001–002–01G 11:33 22/01/2024 EDWARDM3/NB41253