DocuSign Envelope ID: 0C4A1C45-BB6E-4BE4-9477-A91936775E2D

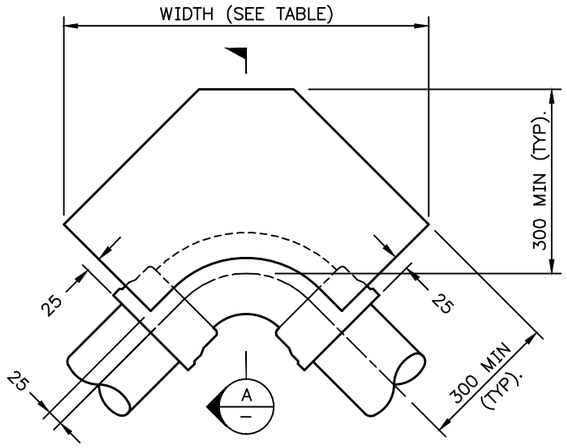

PLAN – 90° BENDS

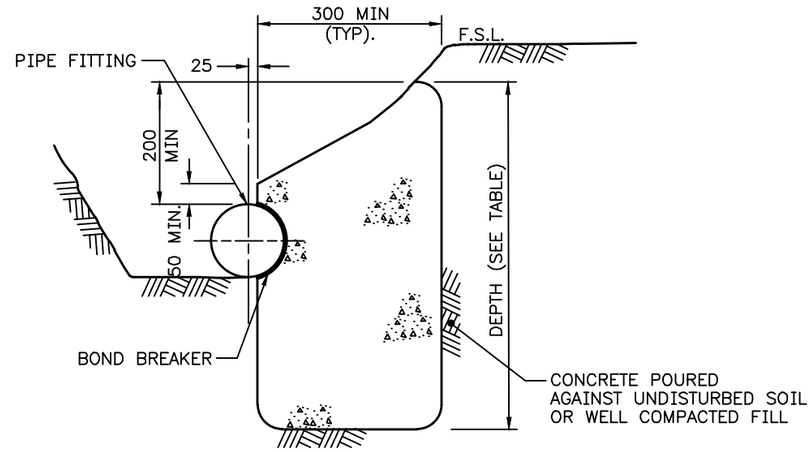

SECTION A –

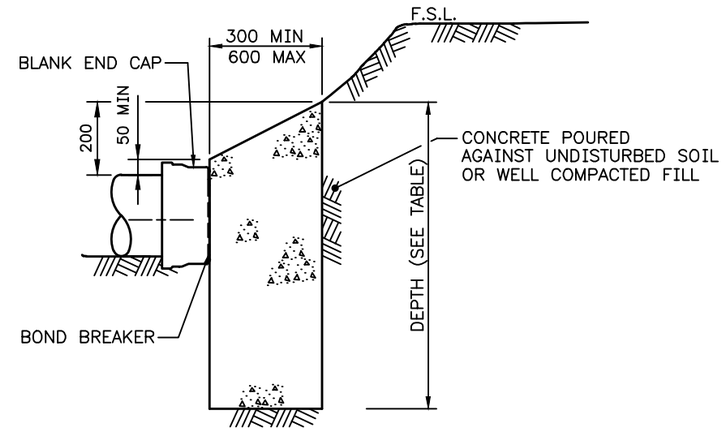

SECTION B –

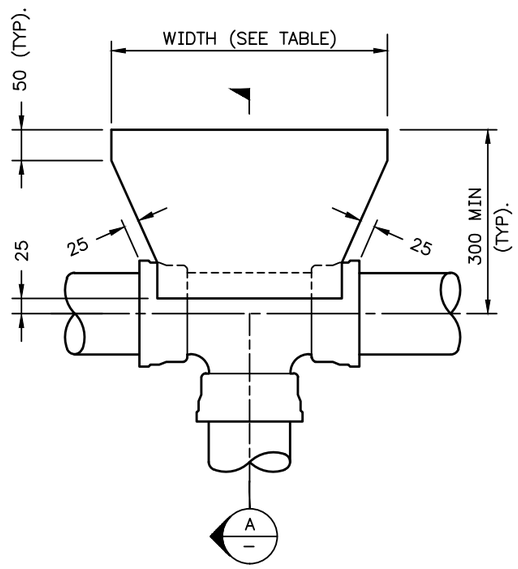

PLAN – TEES

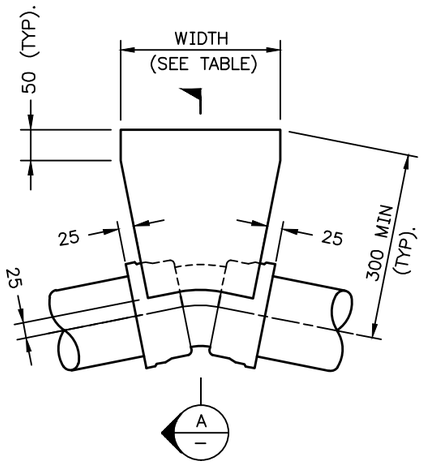

PLAN – 11.25° TO 45° BENDS

NOMINAL DIAMETER	TYPE OF FITTING	WIDTH MIN.	DEPTH MIN.
100	90° BEND	500	600
	45° BEND	300	600
	22.5° BEND	300	600
	11.25° BEND	300	400
	TEE & BL. END	400	600
150	90° BEND	900	750
	45° BEND	500	750
	22.5° BEND	400	750
	11.25° BEND	300	600
	TEE & BL. END	600	750

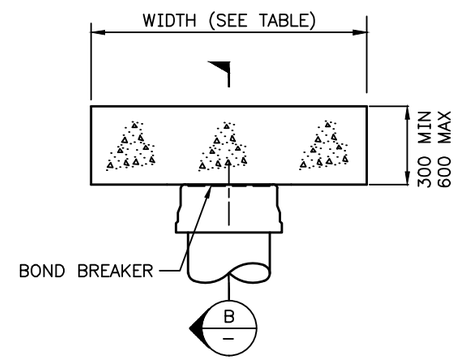

BLANK ENDS

NOTES :

1. JUSTIFICATION FOR THRUST SUPPORT BLOCKS LARGER THAN SHOWN IN THE TABLE SHALL BE SUBMITTED FOR RECORD PURPOSES PRIOR TO ISSUE OF DESIGN DRAWINGS
2. POLYETHYLENE SLEEVING SHALL BE INSTALLED ON DI PIPELINES TO AS3680
3. THRUST SUPPORTS ARE INTENDED TO RESIST AN ASSUMED 1200 kPa (120m) MAXIMUM THRUST AGAINST COMPACT UNDISTURBED SOIL OR WELL COMPACTED FILL MATERIAL
4. WELL COMPACTED FILL SHALL PROVIDE A FILL PENETRATION RESISTANCE OF AT LEAST 7 BLOWS PER 300MM OF PENETRATION, WHEN TESTED IN ACCORDANCE WITH AS1289.6.3.3
5. PIPELINE FITTINGS TO BE PROVIDED WITH CONCRETE THRUST SUPPORT SHALL BE OVER–WRAPPED WITH A BOND–BREAKING MEMBRANE OF ACCEPTABLE DESIGN PRIOR TO CONCRETING
6. PIPELINE JOINTS SHALL NOT BE WHOLLY OR PARTIALLY ENCASED IN CONCRETE
7. CONCRETE SHALL BE GRADE N25
8. ~~BEARING CAPACITY CALCULATIONS OF SOIL MATERIAL (CLAYEY SAND) TAKEN TO BE~~ 92kPa
9. THRUST BLOCKS MUST NOT ENCROACH BEYOND THE NORMAL WATER RETICULATION ALIGNMENT BOUNDARIES G

WIDTH OF THRUST SUPPORT BLOCK SHALL BE DESIGNED FOR BRANCH DIAMETER. REFER TO BD62–2–5 FOR BRANCH DIA LARGER THAN DN150

SCALE : DIAGRAMMATIC

ISSUE	DATE	GRID	REVISION	DRN	REC	APPD
G	01/2024		NOTE 9 ADDED	ME	JA	AA
F	05/2012		THRUST SUPPORTS AMENDED	AC	CW	PF
E	11/2000		DRAWING NOTES REVISED	PAM	K.R.	K.R.

DES CALC
J.DAVIES
DES CHD

DRN
C.BAGSHAW
Q.C. CHD
P.WINFIELD

RECOMMENDED 01/07/1994
J. DAVIES (SIGNED)
FOR SUPERVISING ENGINEER

APPROVED 01/07/1994
D.S. BROOKS (SIGNED)
FOR MANAGER W.S.P. & DESIGN

WATER CORPORATION

WATER RETICULATION
STANDARD DRAWINGS
CONCRETE THRUST SUPPORTS – DN100 & DN150
BENDS, TEES & BLANK ENDS – PVC & DI PIPELINES

FILE
PLAN
CAD
ISSUE
PROJECT
BD62–2–4
G

ORIGINAL SHEET SIZE
A3
MF

283
394

© THIS DRAWING IS THE PROPERTY OF THE WATER CORPORATION. IT SHALL NOT BE COPIED WITHOUT PERMISSION.

CAD MANAGEMENT_NOT READ ONLY\WDCS\STANDARD DRAWINGS\DS63\DS63 UPDATES 2024\BD62–002–004–01G 09:26 22/01/2024 EDWARDM3/NB41253