DocuSign Envelope ID: EB24E9B7-B207-4FD4-856E-BDF75714A589

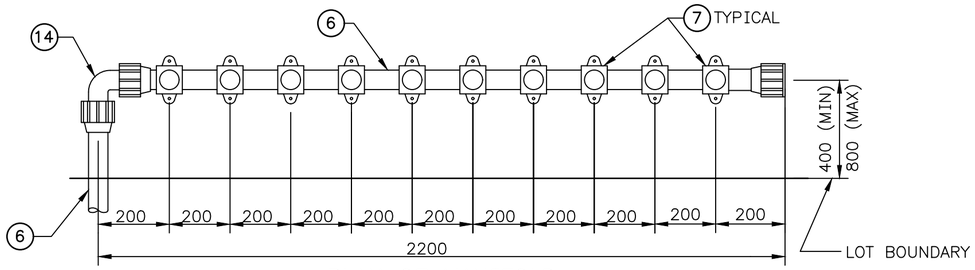

PLAN OF MANIFOLD

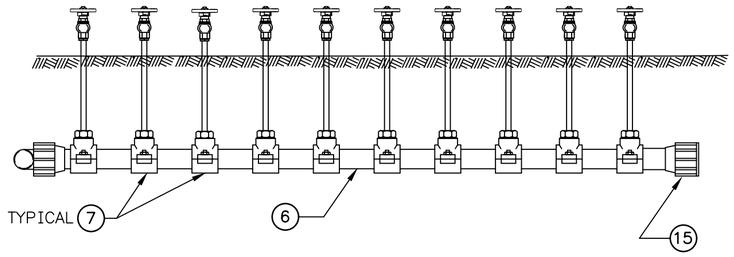

ELEVATION OF MANIFOLD

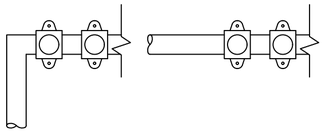

ALTERNATIVE SERVICE PIPE CONFIGURATIONS

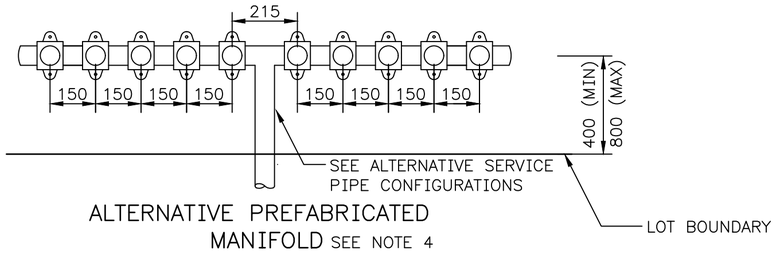

ALTERNATIVE PREFABRICATED MANIFOLD SEE NOTE 4

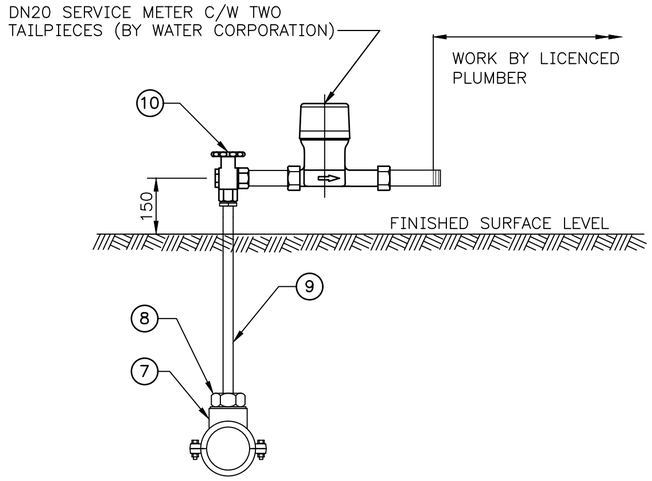

SERVICE CONNECTION DETAIL

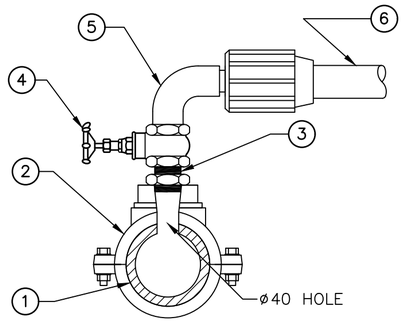

DN40 TAPPING
(MAX 6 CONNECTIONS)

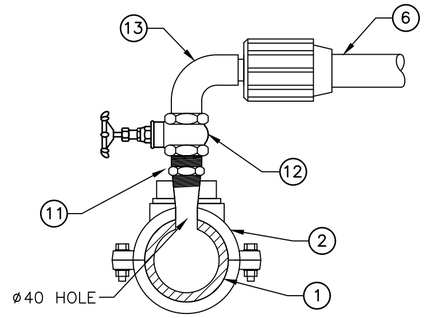

DN50 TAPPING
(7–10 CONNECTIONS)

MAIN CONNECTION DETAIL

NOTES:

1. PE PIPE SHALL: H
   (a) HAVE AN SDR OF 9 OR LOWER;
   (b) BE DISINFECTION RESISTANT AS DEFINED IN SPS125;
   (c) BE HSCR AS PER PIPA POP016;
   (d) COMPLY WITH AS 4130; AND
   (e) BE MANUFACTURED FROM A RESIN LISTED IN THE STRATEGIC PRODUCT REGISTER.
2. THREADED PIPE FITTING ENDS SHALL BE SERIES "R" (EXTERNALLY THREADED) AND SERIES "RP" (INTERNALLY THREDED) TO AS ISO 7.1.
3. COPPER ALLOY COPPER GATE VALVES SHALL BE TO WATER CORPORATION SPECIFICATION SPS 255.
4. ALTERNATIVE PREFABRICATED MANIFOLD CONFORMING TO THESE DIMENSIONAL REQUIREMENTS SHALL BE SUBJECT TO WRITTEN ACCEPTANCE BY THE CORPORATION. THE NUMBER OF SERVICE CONNECTIONS PER MANIFOLD SHALL BE SELECTED TO SUIT LOT DEVELOPMENT REQUIREMENTS.
5. PIPE FITTING FOR JOINTING OF PE PIPE TO BE TO AS/NZS4129 AND SHALL BE RATED PN16 OR HIGHER. H

TABLE OF MATERIALS AND STANDARDS

MARK	PIPE/FITTING DESCRIPTION	MATERIAL	UPSTREAM END	DOWNSTREAM END	STANDARD	MMR
15	OD63 Manifold End Cap/Plug	PP	OD63 PE c/w O Ring Seal	Blank End	AS/NZS4129	18295
14	OD63 90° Manifold Elbow	PP	OD63 PE c/w O Ring Seal	OD63 PE c/w O Ring Seal	AS/NZS4129	13990
13	OD63 90° Elbow	PP	R 2/50	OD63 PE c/w O Ring Seal	AS/NZS4129	19076
12	DN50 Gate Valve c/w CI Handwheel	Copper Alloy	RP 2/50	RP 2/50	SPS 230	1813
11	DN40 Reducing Nipple	Copper Alloy	R 1½/40	R 2/50	AS3688 & AS2345	9269
10	DN20 Meter Ball Valve	Copper Alloy	RP¾ /20	RP¾ /20	SPS 254	19835
9	DN20 Service Riser Tube	Copper Type A	#N/A	#N/A	AS1432	12407
8	DN20 Tube Adaptor	Copper Alloy	R¾/20	DN20 Capillary	AS3688 & AS2345	10593
7	DN63 Tapping Band tapped DN20	To suit PE pipe	#N/A	RP ¾/20	DS63 Table 3.1	16564
6	OD63 Polyethylene Pipe	PE100 NOTE 1 H	#N/A	#N/A	AS/NZS4130	22800 H
5	OD63 PE 90° Elbow	PP	R 1½/40	OD63 PE c/w O Ring Seal	AS/NZS4129	
4	DN40 Gate Valve c/w CI Handwheel	Copper Alloy	RP 1½/40	RP 1½/40	SPS 255	1812
3	DN40 Nipple	Copper Alloy	R 1½/40	R 1½/40	AS3688 & AS2345	1930
2	Tapping Band tapped DN40	To suit pipe	#N/A	RP 1½/40	DS63 Table 3.1	
1	Reticulation Watermain	VARIES	#N/A	#N/A	DS63 Table 3.1	

ISSUE	DATE	GRID	REVISION	DRN	REC	APPD
H	05/2021		MARK 6 IN TABLE AND NOTE 1 AMENDED. NOTE 5 ADDED.	ME	AA	JD
G	04/2019		PE SPECIFICATION UPDATED	MD	AA	JD
F	07/2013		HANDWHEELS ADDED, METER CHANGED AND DIMENSION REMOVED	BJ	CW	DVDN
E	09/2012		NOTES & TABLE AMENDED	BJ	CW	KR

SCALE : DIAGRAMMATIC

SURVEY BOOKS	VERTICAL DATUM AHD	DES CALC F. FILIPOVIC	NORTH POINT	RECOMMENDED 21/11/2000 K. RODDY FOR SUPERVISING ENGINEER
	COORDINATE SYS UNKNOWN	DES CHD P. CHANG		
	DES REF	DRN F. FILIPOVIC		APPROVED 21/11/2000 J.C. BOND FOR MANAGER I.D. BRANCH
		Q.C. CHD P. CHANG		

WATER CORPORATION

WATER RETICULATION
STANDARD DRAWINGS
3 TO 10 SERVICE CONNECTION MANIFOLDS
TYPICAL ARRANGEMENT

FILE | PLAN BD62-8-9 | CAD | ISSUE H | ORIGINAL SHEET SIZE A2

PROJECT | MF

400
566

© THIS DRAWING IS THE PROPERTY OF THE WATER CORPORATION. IT SHALL NOT BE COPIED WITHOUT PERMISSION.

CAD MANAGEMENT_NOT READ ONLY\WDCS\STANDARD DRAWINGS\DS63\BD62\BD62-008-009-01H 09:09 20/05/2021 EDWARDM3/NB41253