DocuSign Envelope ID: 0C4A1C45-BB6E-4BE4-9477-A91936775E2D

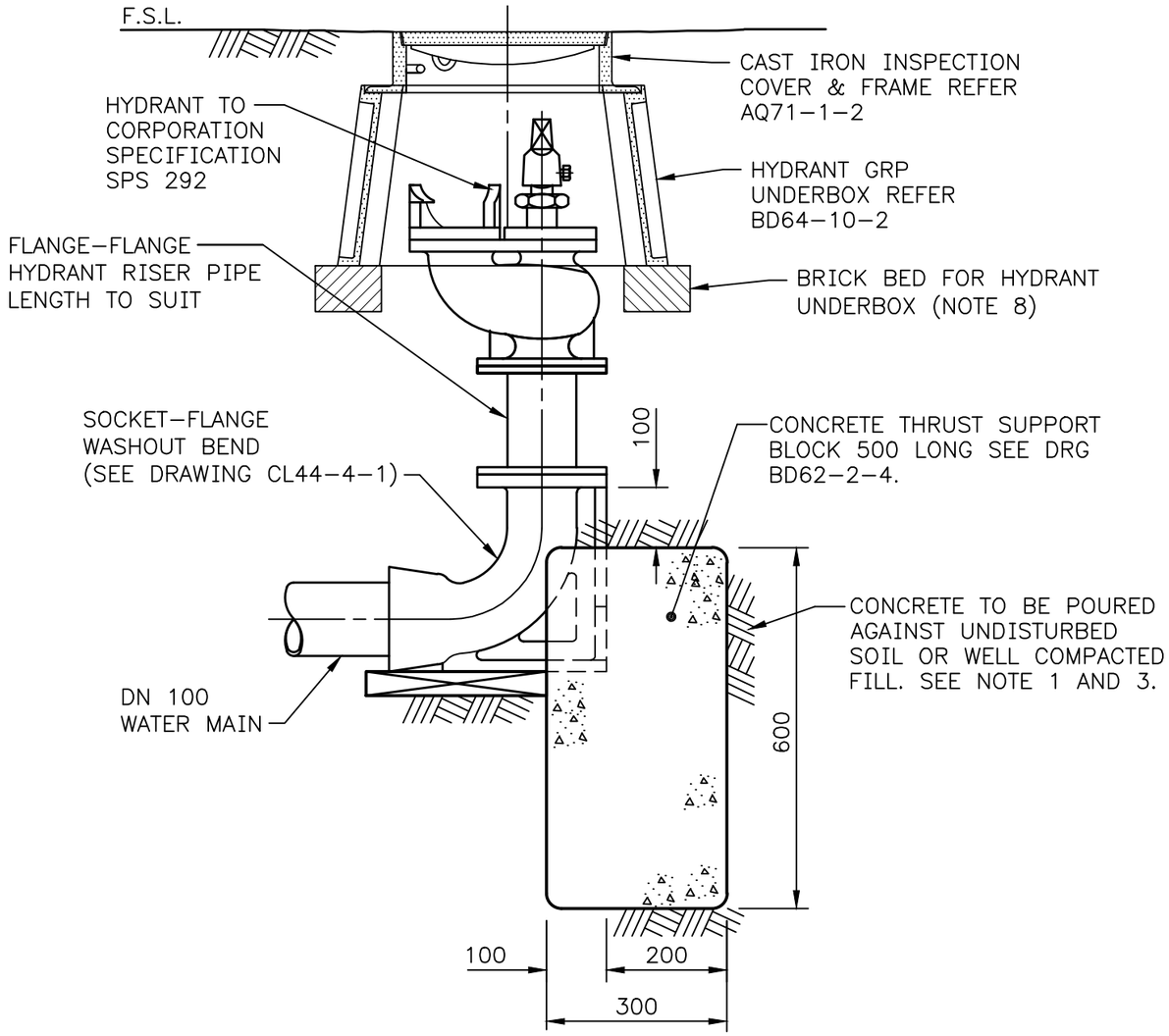

SCALE: DIAGRAMATIC

ISSUE	DATE	GRID	REVISION	DRN	REC	APPD
H	01/2024		ALTERNATIVE INSTALL: TIMBER THRUST SUPPORT DETAIL REMOVED	ME		
G	09/2017		INSPECTION COVER & HYDRANT BOX UPDATED, NOTE 9 ADDED, NOTE 8 AMENDED	CJW	CW	JD
F	12/2006		'APPROVED LIGHTWEIGHT HYDRANT BOX' REVISED TO 'AUTHORISED LIGHTWEIGHT HYDRANT BOX'	AC	MM	JD
E	11/2006		HYDRANT CHAMBER/COVER REPLACED WITH LIGHTWEIGHT HYDRANT BOX	AC	MM	JD
D	11/2000		DRAWING NOTES REVISED	PAM	K.R.	K.R.

NOTES:

1. THE EXCAVATED TRENCH WITHIN 500MM OF AN INSTALLED WASHOUT BEND SHALL BE FILLED WITH SAND IN 150MM LAYERS AND EACH LAYER SHALL BE WELL COMPACTED.
2. POLYETHYLENE SLEEVING SHALL BE INSTALLED ON DI PIPELINES TO AS3680.
3. THRUST SUPPORTS ARE INTENDED TO RESIST AN ASSUMED 1200 KPA MAXIMUM THRUST AGAINST COMPACT UNDISTURBED SOIL OR WELL COMPACTED FILL MATERIAL.
4. WELL COMPACTED FILL SHALL PROVIDE A FILL PENETRATION RESISTANCE OF AT LEAST 7 BLOWS PER 300MM OF PENETRATION, WHEN TESTED IN ACCORDANCE WITH AS1289.6.3.3.
5. PIPELINE FITTINGS TO BE PROVIDED WITH CONCRETE THRUST SUPPORT SHALL BE OVER–WRAPPED WITH A BOND–BREAKING MEMBRANE OF ACCEPTABLE DESIGN PRIOR TO CONCRETING.
6. PIPELINE JOINTS SHALL NOT BE WHOLLY OR PARTIALLY ENCASED IN CONCRETE.
7. CONCRETE SHALL BE GRADE N25.
8. SLUICE VALVE, HYDRANT, METER AND STOP TAP SERVICE CHAMBERS SHALL BE SUPPORTED ON A LEVEL BED OF SIX SOLID BRICKS (230x115x75) WHICH HAVE BEEN FIRMLY SET ON AND INTO WELL COMPACTED FILL.
9. SEE PRODUCT REGISTER FOR LIST OF APPROVED PRODUCTS.

DES CALC W 7087
DES CHD 6/94
DRN F. RACCUIA
Q.C. CHD P. WINFIELD

RECOMMENDED 30/06/1994
P.M. WINFIELD (SIGNED)
FOR SUPERVISING ENGINEER

APPROVED 30/06/1994
D.S. BROOKS (SIGNED)
FOR MANAGER W.S.P. & DESIGN

WATER CORPORATION

WATER RETICULATION
STANDARD DRAWINGS
THRUST SUPPORTS FOR WASHOUT BEND WITH HYDRANT
TYPICAL INSTALLATION DETAILS

FILE
PROJECT
PLAN BD62–2–6
CAD
ISSUE H

ORIGINAL SHEET SIZE A3

MF

283
394

© THIS DRAWING IS THE PROPERTY OF THE WATER CORPORATION. IT SHALL NOT BE COPIED WITHOUT PERMISSION.

CAD MANAGEMENT_NOT READ ONLY\WDCS\STANDARD DRAWINGS\DS63\DS63 UPDATES 2024\BD62–002–006–01H 09:26 22/01/2024 EDWARDM3/NB41253