DocuSign Envelope ID: 0C4A1C45-BB6E-4BE4-9477-A91936775E2D

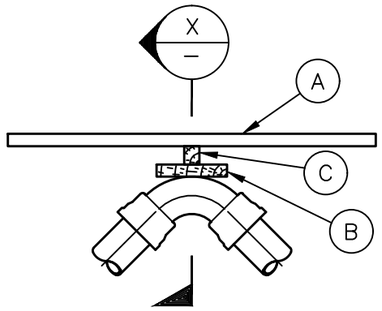

11.25° TO 90° BENDS

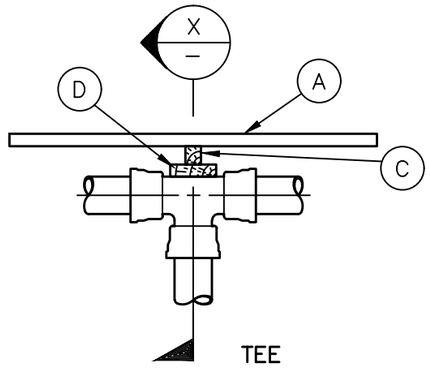

TEE

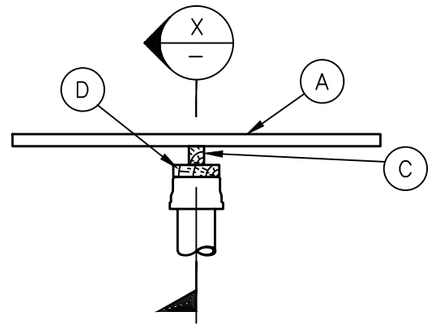

BLANK END

TIMBER THRUST SUPPORTS FOR DN 100 FITTINGS

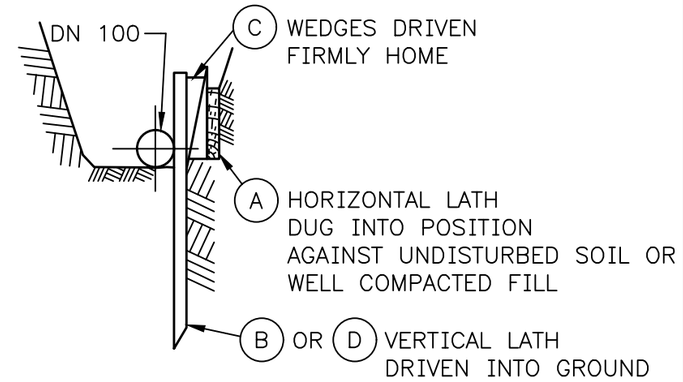

SECTION X

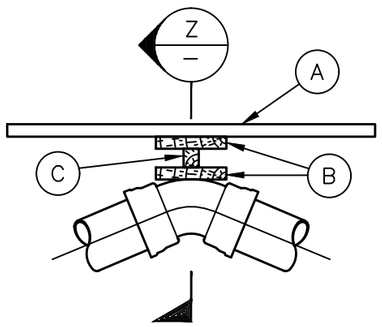

11.25° TO 90° BENDS

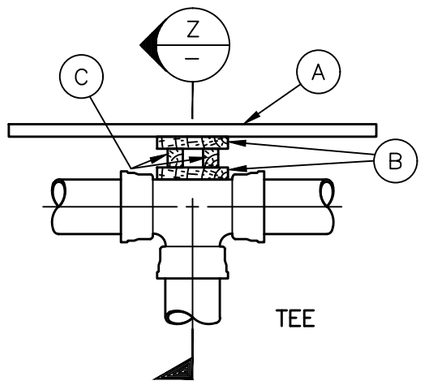

TEE

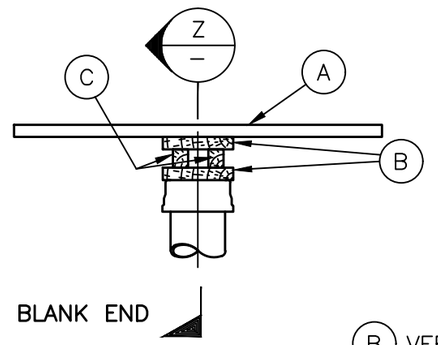

BLANK END

TIMBER THRUST SUPPORTS FOR DN 150 FITTINGS

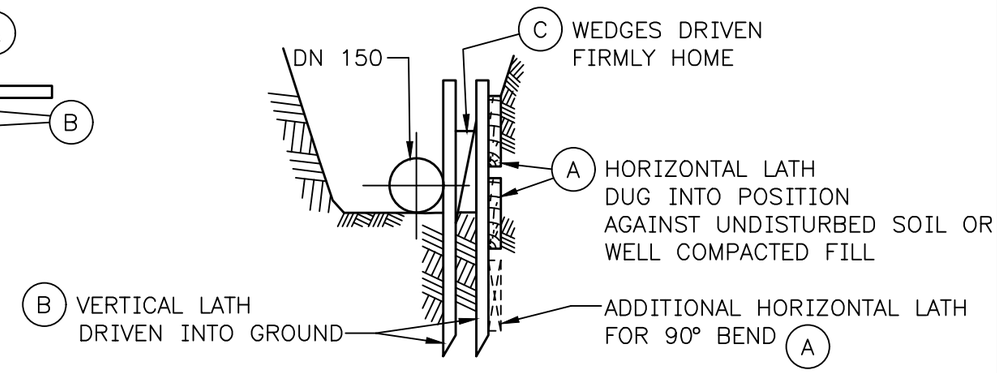

SECTION Z

TIMBER DIMENSIONS

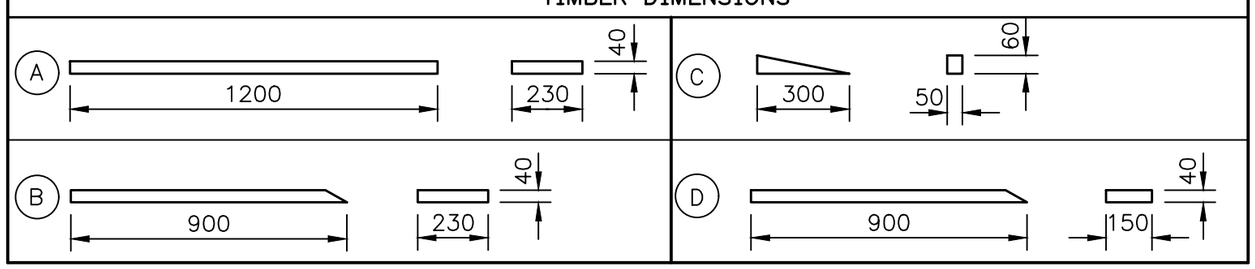

SCALE: DIAGRAMATIC

NOTE :

1. ALL THRUST SUPPORTS SHALL BE JARRAH, OR AN ALTERNATIVE LIGHTWEIGHT MATERIAL (INCLUDING PLASTICS) OF AN APPROVED DESIGN.
2. 2. DISTURBED AND UNDISTURBED LOOSE MATERIAL, THAT IS INTENDED TO SUPPORT THRUST SHALL BE CONDITIONED TO THE STANDARD OF WELL COMPACTED FILL
3. THRUST SUPPORTS ARE INTENDED TO RESIST AN ASSUMED 1200 KPA MAXIMUM THRUST AGAINST COMPACT UNDISTURBED SOIL OR WELL COMPACTED FILL MATERIAL
4. WELL COMPACTED FILL SHALL PROVIDE A FILL PENETRATION RESISTANCE OF AT LEAST 7 BLOWS PER 300MM OF PENETRATION, WHEN TESTED IN ACCORDANCE WITH AS1289.6.3.3
5. (G) THRUST SUPPORTS IN THIS DRAWING ARE TEMPORARY ONLY AND ARE ONLY TO BE USED WHEN CONCRETE THRUST BLOCK ARRANGEMENTS ARE NOT PRACTICAL AND A MORE PERMANENT SOLUTION IS ENSURED TO BE RETROFITTED TO THE ARRANGEMENT IN A TIMELY FASHION.

ISSUE	DATE	GRID	REVISION	DRN	REC	APPD
G	01/2024		LINE 3 OF TITLE BLOCK AMENDED. NOTE 5 ADDED	ME	JA	JA
F	03/2004		NOTE 1 AMENDED	KLM	MM	JD
E	11/2000		DRAWING NOTES REVISED	PAM	K.R.	K.R.

DES CALC W 7087
DES CHD 2/94
DRN F. RACCUIA
Q.C. CHD P. WINFIELD

RECOMMENDED 30/06/1994
P.M. WINFIELD (SIGNED)
FOR SUPERVISING ENGINEER

APPROVED 30/06/1994
D.S. BROOKS (SIGNED)
FOR MANAGER W.S.P. & DESIGN

WATER CORPORATION

WATER RETICULATION
STANDARD DRAWINGS
TEMPORARY THRUST SUPPORTS – DN100 & DN150
BENDS, TEES AND BLANK ENDS – PVC AND DI PIPELINES

FILE
PROJECT
PLAN BD62-2-3
CAD
ISSUE G
ORIGINAL SHEET SIZE A3
MF

283
394

© THIS DRAWING IS THE PROPERTY OF THE WATER CORPORATION. IT SHALL NOT BE REPRODUCED WITHOUT PERMISSION.
CAD MANAGEMENT_NOT READ ONLY\WDCS\STANDARD DRAWINGS\DS63\DS63 UPDATES 2024\BD62-002-003-01G 09:26 22/01/2024 EDWARDM3/NB41253