DocuSign Envelope ID: 0C4A1C45-BB6E-4BE4-9477-A91936775E2D

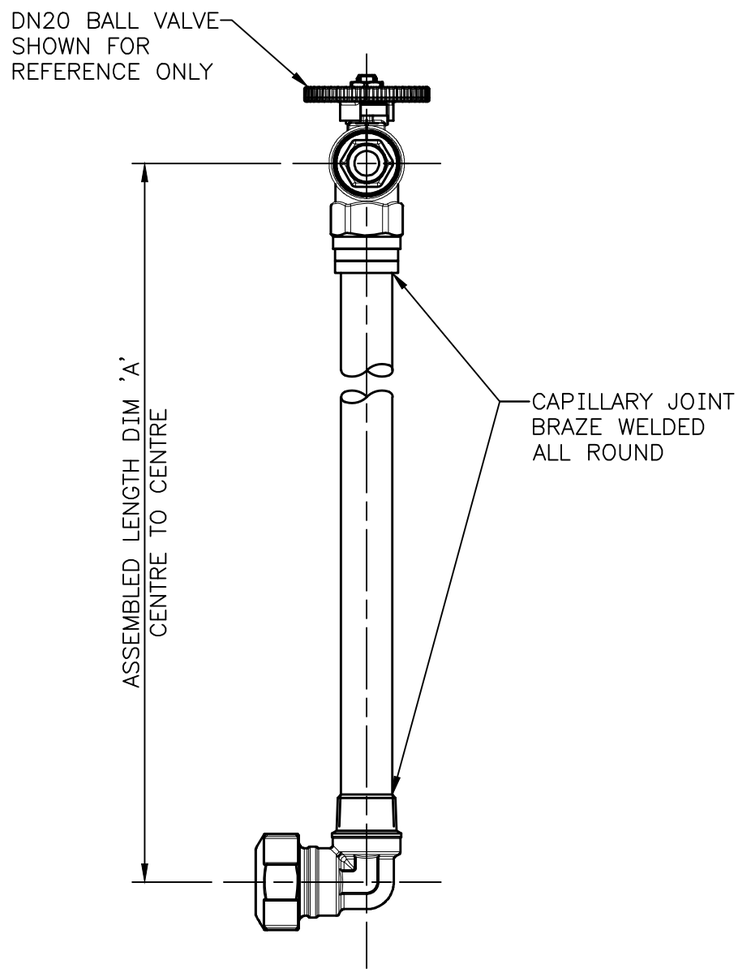

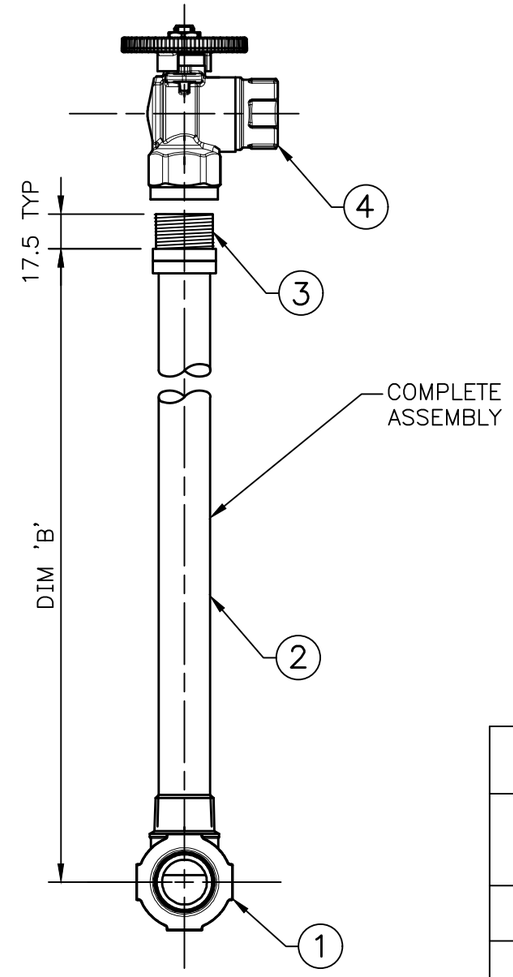

TABLE OF DIMENSIONS			
INSTALLATION TYPE	DIM 'A'	DIM 'B'	MMR
ABOVE GROUND	670 TYP.	628 ±1	21150
BELOW GROUND	340 TYP.	298 ±1	21165

TABLE OF MATERIALS AND STANDARDS						
MARK	PIPE/FITTING DESCRIPTION	MATERIAL	UPSTREAM END	DOWNSTREAM END	STANDARD	MMR
1	DN20 90° Elbow	Copper Alloy	DN25 PE c/w O Ring Seal	DN20 Capillary	AS4129	N/A
2	DN20 Service Riser Tube	Copper Type A	N/A	N/A	AS1432	N/A
3	DN20 Tube Adaptor	Copper Alloy	DN20 Capillary	R¾ /20	AS ISO 7.1 & AS3688	1796
4	DN20 Metal Ball Valve	Copper Alloy	RP ¾ /20	RP ¾ /20	SPS 254	19835

GENERAL NOTES:

1. REFERENCE DRAWINGS BD62–8–8, BD62–8–10,BD62–8–15, BD62–8–24 (DRINKING WATER) AND KN42–10–1 TO KN42–10–4 (NON–DRINKING WATER).
2. ALL DIMENSIONS ARE IN MILLIMETRES.
3. REFER DRAWING BD62–2–9 FOR BELOW GROUND SERVICE INSTALLATION DETAIL.
4. THREAD SEALANT PASTE COMPLIANT WITH AS/NZS 4020 MUST BE USED ON ALL THREAD CONNECTIONS.
5. EACH ASSEMBLY MUST BE PRESSURE TESTED TO 1,200kPa

F

SCALE: DIAGRAMATIC

ISSUE	DATE	GRID	REVISION	DRN	REC	APPD
F	01/2024		NOTE 5 ADDED	ME	JA	JA
E	12/2021		NOTE 4 AMENDED	FR	AA	JD
D	07/2013		NOTE 4 AMENDED	BJ	CW	DVDN
C	07/2013		NOTE 4 ADDED	BJ	CW	PF
B	05/2013		DRAWING TITLE AND TABLE AMENDED, DIMENSIONS TABLE ADDED	BJ	CW	PF

DES CALC

DES CHD

DRN
B. JEFFERS

Q.C. CHD
P. MIRCO

RECOMMENDED 09/04/2013
C. WOOLFORD (SIGNED)
SENIOR ENGINEER, WDCS

APPROVED 10/04/2013
P. FINLAY (SIGNED)
PRINCIPAL ENGINEER, WDCS

WATER CORPORATION

WATER RETICULATION
STANDARD DRAWINGS
DN20 COPPER RISER – 340mm AND 670mm
COMPLETE ASSEMBLY

FILE

PROJECT

PLAN BD22–5–8

CAD

ISSUE F

ORIGINAL SHEET SIZE A3

MF

283
394

© THIS DRAWING IS THE PROPERTY OF THE WATER CORPORATION. IT SHALL NOT BE COPIED WITHOUT PERMISSION.

CAD MANAGEMENT_NOT READ ONLY\WDCS\STANDARD DRAWINGS\DS63\DS63 UPDATES 2024\BD22–005–008–01F 09:26 22/01/2024 EDWARDM3/NB41253