WORK CARRIED OUT BY WATER RETICULATION CONSTRUCTOR AT TIME OF WATERMAIN INSTALLATION

TYPICAL ARRANGEMENT WHERE FINISHED LOT AND ROAD VERGE SURFACE ELEVATIONS ARE SIMILAR

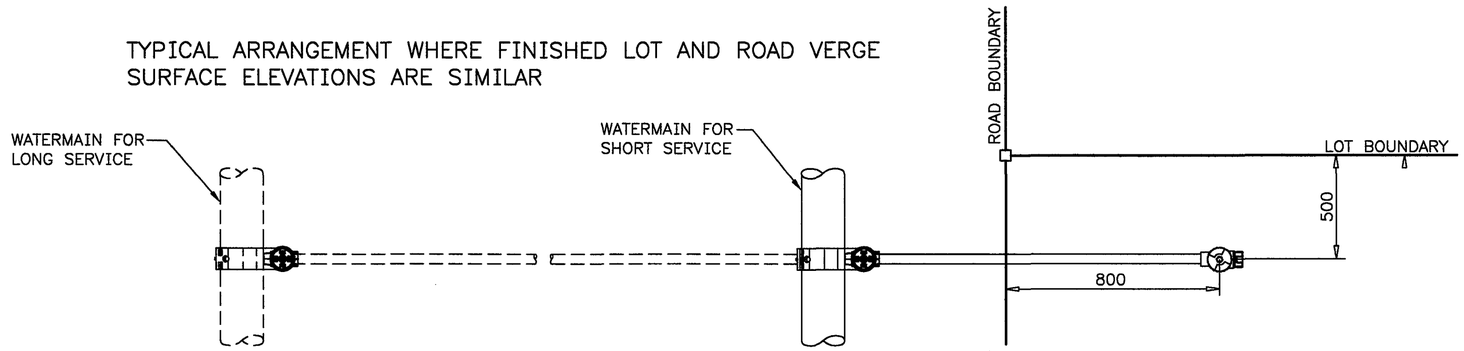

PLAN

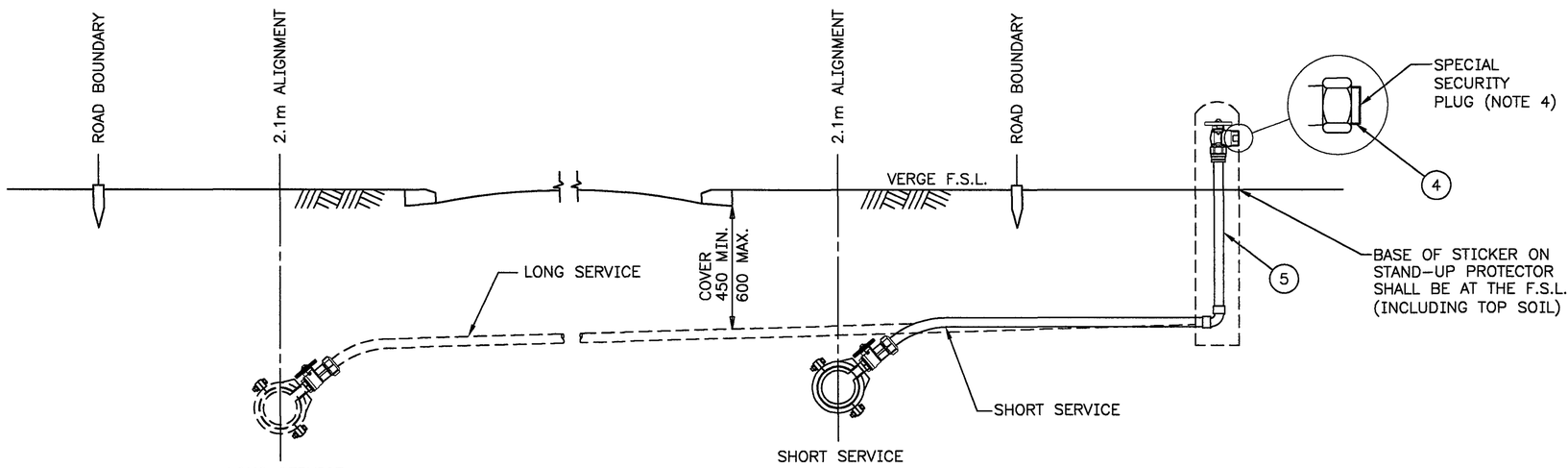

ELEVATION

F.S.L. = FINISHED SURFACE LEVEL

TYPICAL VARIATION TO ARRANGEMENT FOR LOT AT DIFFERENT ELEVATION TO ROAD RESERVE (WITH RETAINING WALL)

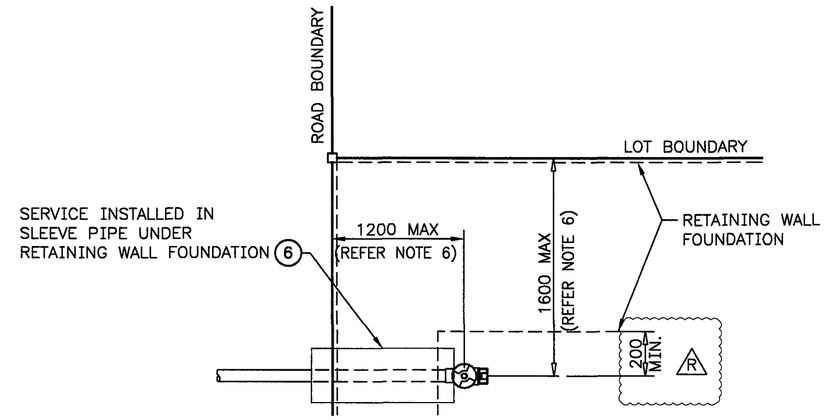

PLAN

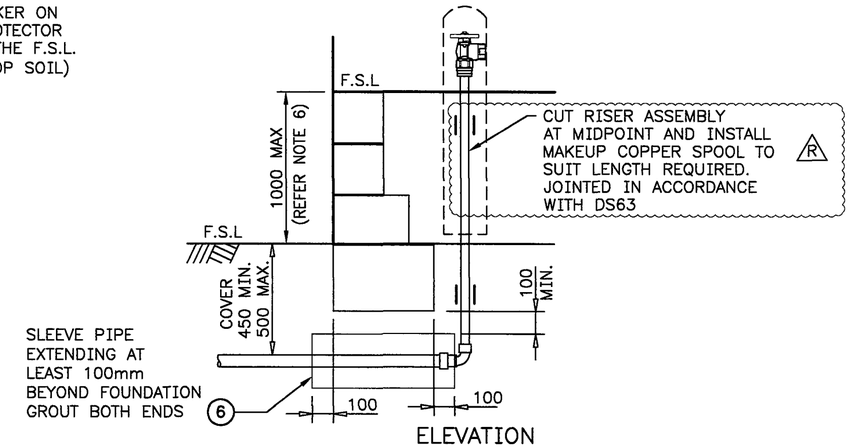

ELEVATION

R

TABLE OF MATERIALS AND STANDARDS (NOTE 7)						
MARK	PIPE/FITTING DESCRIPTION	MATERIAL	UPSTREAM END	DOWNSTREAM END	STANDARD	MMR
6	DN100 SN10 PVC Pipe	uPVC	#N/A	#N/A	AS/NZS1260	–
5	Stand–up Protector	PE100	#N/A	#N/A	BD64–9–1	20245
4	Security Plug	–	–	–	–	20246

NOTES:

1. ALL SINGLE WATER SERVICES (SHORT AND LONG) SHALL BE DN20 (OD25 PE PIPE).
2. REFER TO DRAWING BD62–8–10 FOR SERVICE CONFIGURATION AND FITTING DETAILS.
3. EACH PRELAID SERVICE INCLUDING DRY WATER MAIN TAPPINGS, SERVICE PIPELINE AND STOP TAP SHALL BE INSTALLED AT THE TIME OF WATER MAIN INSTALLATION. EACH SERVICE RISER PIPE SHALL BE PROTECTED BY MEANS OF A STAND–UP PROTECTOR IN ACCORDANCE WITH DRAWING BD64–9–1.
4. EACH SERVICE CONNECTION ASSEMBLY SHALL BE PRESSURE TESTED AND MAINTAINED IN LIVE CONDITION WITH IT'S BALL VALVE SEALED WITH A SPECIAL SECURITY PLUG.
5. THE CORPORATION WILL INSTALL THE SERVICE METER AND TEMPORARY BUILDERS' STANDPIPE AND WILL ACTIVATE THE SERVICE, WHEN THE PROPERTY OWNER HAS COMPLETED SERVICE APPLICATION FORMALITIES.
6. ANY DIMENSION EXCEEDING MAX. RANGE SHOWN SHALL BE SUBJECT TO WRITTEN ACCEPTANCE BY THE WATER CORPORATION.
7. R REFER BD62–8–10 FOR ADDITIONAL MATERIAL DETAILS.

ISSUE	DATE	GRID	REVISION	DRN	REC	APPD
R	04/2019		REVISED AS CLOUDED	MD	AA	AD
Q	04/2013		RISER ASSEMBLY, NOTES AND TABLE AMENDED	BJ	CW	DVDN
P	09/2012		SHORT SERVICE AND LONG SERVICE CONNECTIONS AMENDED, TABLE AND NOTES AMENDED	BJ	CW	KR

SCALE : DIAGRAMMATIC

DESIGN SURVEY NONE	VERTICAL DATUM AHD	DES CALC W 7087	NORTH POINT	RECOMMENDED 30/06/1994 P.M. WINFIELD (SIGNED) FOR SUPERVISING ENGINEER
	COORDINATE SYS NONE	DES CHD 2/94		
ASCON SURVEY NONE	DES REF	DRN F. RACCUIA		APPROVED 30/06/1994 D.S. BROOKS (SIGNED) FOR MANAGER W.S.P. & DESIGN
		Q.C. CHD P. WINFIELD		

WATER CORPORATION

WATER RETICULATION
STANDARD DRAWINGS
PRELAID SINGLE WATER SERVICES (DN20 SHORT & LONG)
TYPICAL ARRANGEMENT (OD25 PE PIPE)

FILE | PLAN BD62–8–15 | CAD | ISSUE R | ORIGINAL SHEET SIZE A2

PROJECT

MF 10 APR 2019

400
566

© THIS DRAWING IS THE PROPERTY OF THE WATER CORPORATION. IT SHALL NOT BE COPIED WITHOUT PERMISSION.

CAD MANAGEMENT_NOT READ ONLY\WDCS\STANDARD DRAWINGS\DS63\BD62\BD62–008–015–01R 07:12 10/04/2019 madetkl0/WS27107