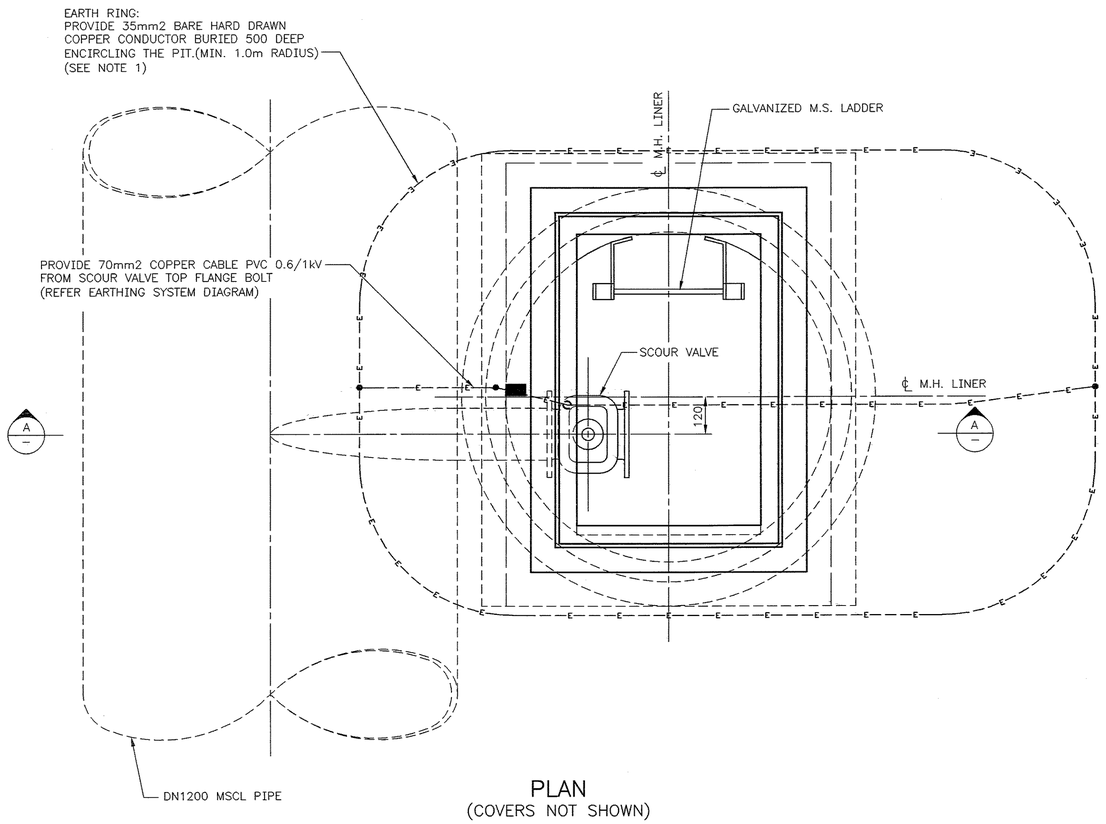

PLAN
(COVERS NOT SHOWN)

NOTE: PIT DETAILS ARE INDICATIVE ONLY REFER TO EG20-6-1 FOR PIT ARRANGEMENT.

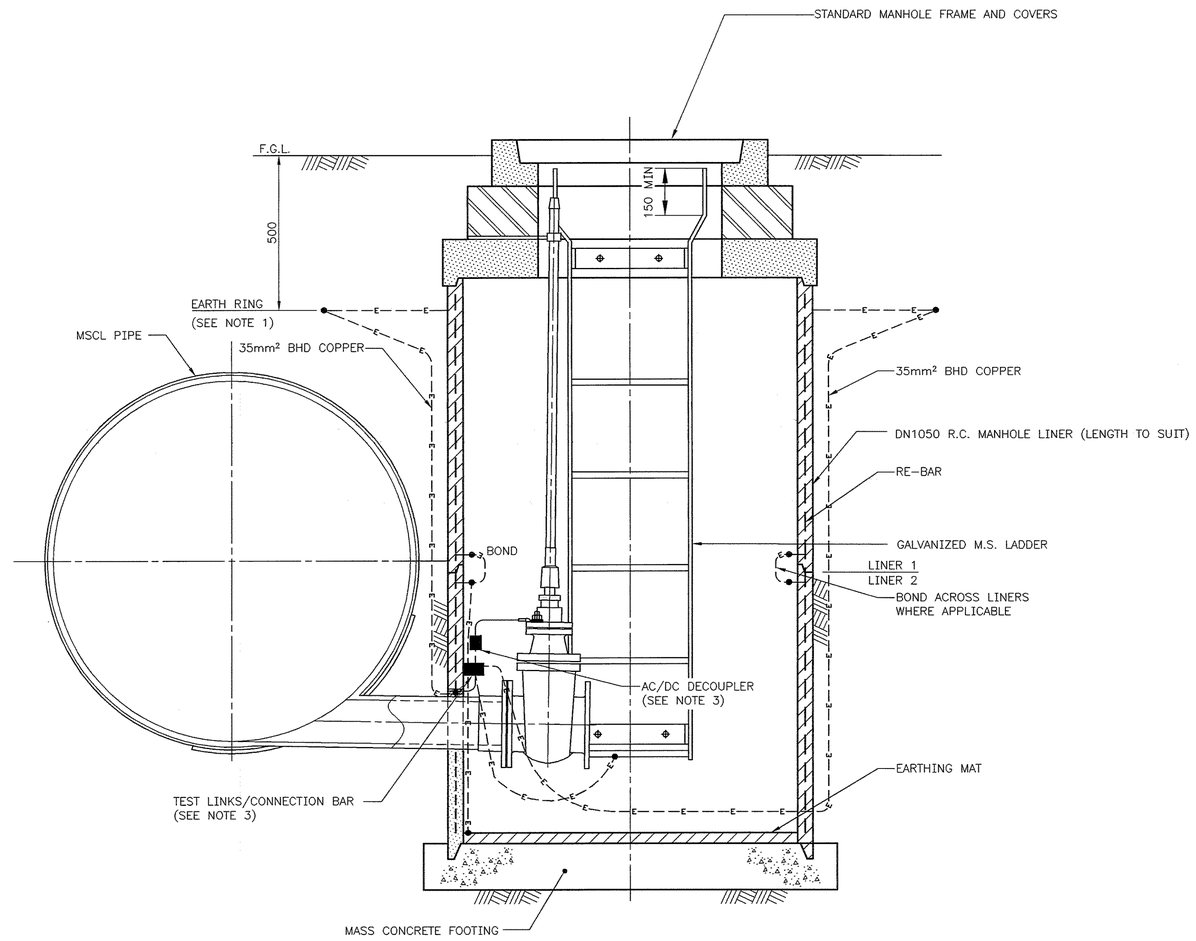

SECTION A

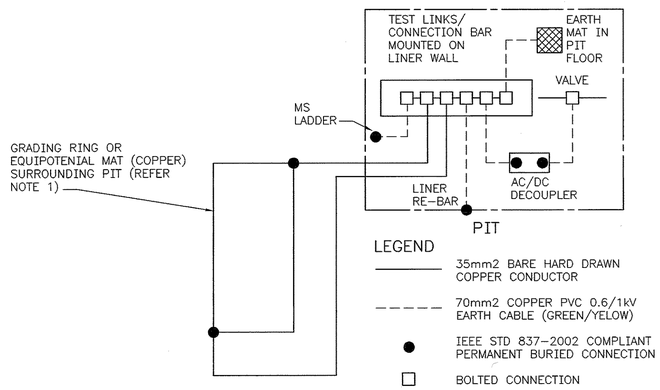

EARTHING SYSTEM DIAGRAM

GENERAL NOTES

1. FOR GENERAL APPLICATION, GRADING RING TO BE DEPLOYED. FOR PIPELINE VOLTAGE MITIGATION APPLICATIONS, THE DESIGN OF MAT/RING SHALL BE IN ACCORDANCE WITH THE PIPELINE VOLTAGE MITIGATION DESIGN BY CONSULTING ENGINEER.
2. AC/DC DECOUPLER TO BE DEI SSD OR APPROVED EQUIVALENT.
3. LOCATIONS OF TEST LINKS/CONNECTION BAR AND AC/DC DECOUPLER ARE INDICATIVE ONLY.

100 50 0 100 200 300 400 500 600 700 mm (1:10)

ISSUE	DATE	GRID	REVISION	DRN	REC	APPD

DESIGN SURVEY | VERTICAL DATUM NONE | COORDINATE SYS NONE | ASCON SURVEY | DES REF | DES CALC | DES CHD | DRN K MCGREGOR | Q.C. CHD G CLEAVER

NORTH POINT

INFRASTRUCTURE DESIGN BRANCH

RECOMMENDED 24/11/08 PRINCIPAL ELECTRICAL ENGINEER (POWER)

APPROVED 25/11/08 for MANAGER I. D. BRANCH

WATER CORPORATION

WATER SUPPLY DISTRIBUTION
STANDARD DRAWINGS
SCOUR VALVE PIT – EARTHING DETAIL

FILE | PROJECT | PLAN EG20-6-7 | CAD | ISSUE A

ORIGINAL SHEET SIZE A1

MF 27 NOV 2008

566
810

© THIS DRAWING IS THE PROPERTY OF THE WATER CORPORATION. IT SHALL NOT BE COPIED WITHOUT PERMISSION.

CAD MANAGEMENT_NOT READ ONLY\WDCS\STANDARD DRAWINGS\MANUALS\WATER SUPPLY DISTRIBUTION\REVISIONS 09.2008\18.11.2008\EG20-006-007-01A 14:26 21/11/2008 cleaveaO/WS17935