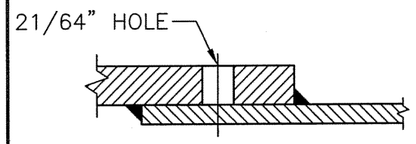

FIGURE 1
(FOR JOINT WELD DETAILS SEE DRG AY58-19-1)

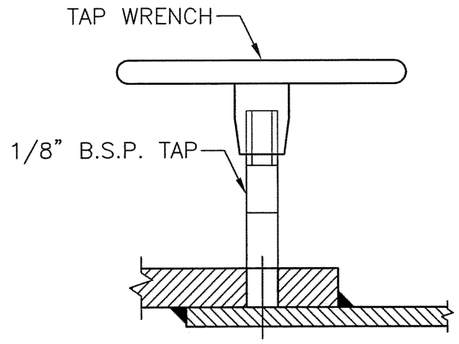

FIGURE 2

NOTE :

1. ALL WELDED JOINTS ON M.S.C.L. PIPES DN900 AND LARGER SHALL BE PNEUMATICALLY PRESSURE TESTED USING EITHER COMPRESSED AIR (SEE FIGURE 3) OR NITROGEN (SEE FIGURE 4).
2. 21/64" HOLES SHALL BE DRILLED INTO WELDING BANDS OR EXPANDED AND COLLAPSED PIPE JOINTS (SEE FIGURE 1) PRIOR TO ASSEMBLY AND WELDING OF JOINT.
3. TEST HOLES SHALL BE THREADED 1/8" B.S.P. (SEE FIGURE 2). ENSURE TEST HOLE IS CLEAN AFTER THREADING.
4. TESTING EQUIPMENT SHALL BE CONNECTED TO TEST HOLES AS SHOWN AT FIGURE 3 (USING COMPRESSED AIR) OR FIGURE 4 (USING NITROGEN).
5. PVC THREAD SEAL SHALL BE USED TO FORM AN AIRTIGHT SEAL WHEN THE PRESSURE GAUGE MANIFOLD IS SCREWED INTO THE TEST HOLE. COPIOUS AMOUNTS OF SOAPY WATER SHALL BE APPLIED AROUND THE STEM OF THE MANIFOLD TO ALLOW THE LEATHER THREAD PACKERS TO EXPAND BEFORE FULLY TIGHTENING THE MANIFOLD INTO THE TEST HOLE. CARE SHOULD BE TAKEN TO ENSURE CROSS THREADING DOES NOT OCCUR.
6. PRESSURE SHALL BE GRADUALLY APPLIED TO THE MANIFOLD USING COMPRESSED AIR OR NITROGEN UNTIL THE PRESSURE GAUGE REGISTERS 1000kPa. THE HAND PUMP OR COMPRESSED NITROGEN SUPPLY SHOULD THEN BE ISOLATED FROM THE MANIFOLD BY CLOSING THE DN10 BALL VALVE.
7. THE PRESSURE IN THE MANIFOLD SHALL MAINTAIN 1000kPA FOR 2 MINUTES. IF THE WELD JOINT LEAKS (PRESSURE DROPS) THEN REPAIRS TO THE WELDS SHALL BE CARRIED OUT AND THE JOINT RETESTED AS ABOVE UNTIL THE TEST HOLDS PRESSURE. SOAPY WATER SHALL BE BRUSHED ONTO THE WELDS TO ENABLE DETECTION OF LEAKS.
8. ALL TEST HOLES SHALL BE SEALED BY WELDING AFTER TESTING IS COMPLETED.

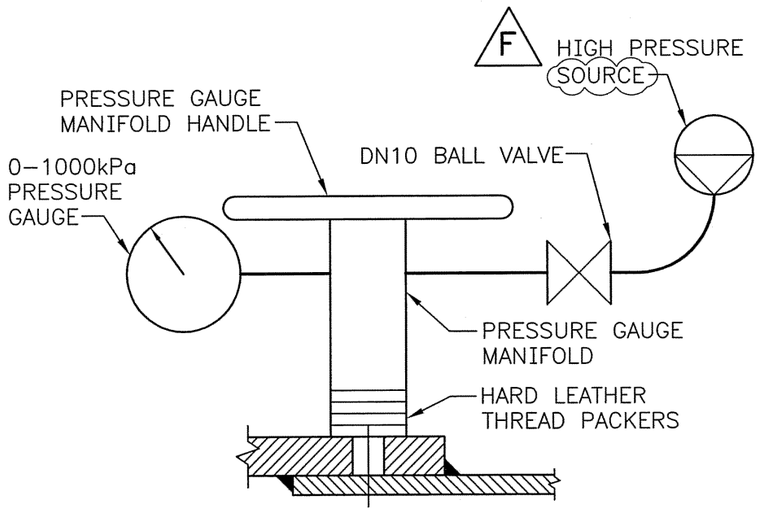

FIGURE 3
(TESTING WITH COMPRESSED AIR)

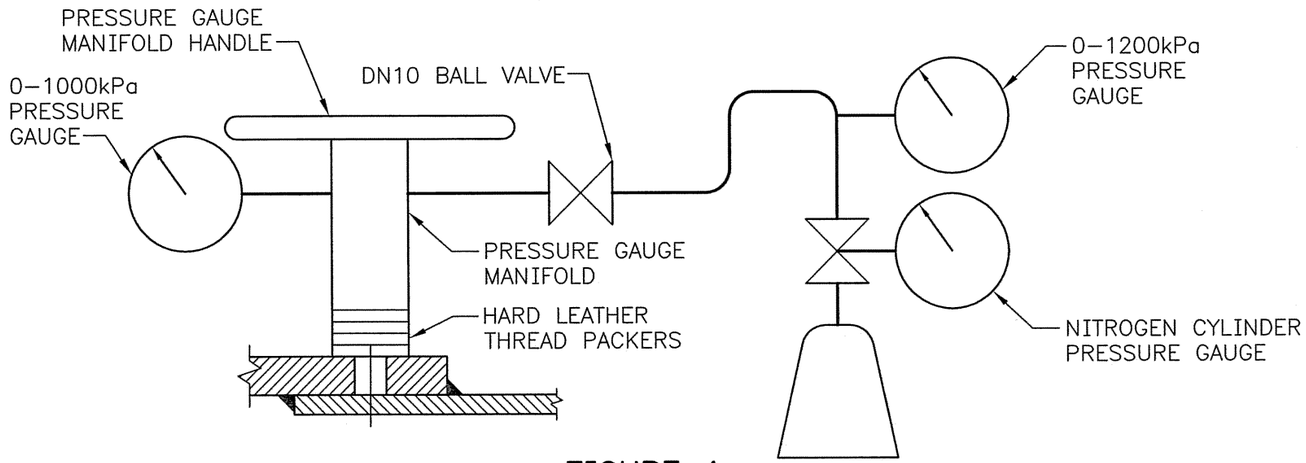

FIGURE 4
(TESTING WITH NITROGEN)

ISSUE	DATE	GRID	REVISION	DRN	REC	APPD
F	10/2008		FIGURE 3 HIGH PRESSURE DRAWING LABEL REVISED	AC	FF F.F.	JD
E	04/2007		TITLE LINES 2 & 4 REVISED ALSO LABEL IDENTIFYING WELD TYPE DELETED	FR	FF	JD

DES CALC
W7070
DES CHD

DRN
G.BURTON
Q.C. CHD
R.CHESTER

RECOMMENDED 23/01/1996
M.CUDMORE (SIGNED)
JOB MANAGER

APPROVED 23/01/1996
M.SHARPE (SIGNED)
PROJECT DIRECTOR

WATER CORPORATION

WATER CORPORATION
PIPE FITTINGS STANDARD – DS 65
PNEUMATIC TEST PROCEDURE
WELDED PIPE JOINTS – WELDED INTERNALLY AND EXTERNALLY

FILE
PROJECT
PLAN AY58-20-1
CAD
ISSUE F

ORIGINAL SHEET SIZE A3

MF 17/10/08

283
394

© THIS DRAWING IS THE PROPERTY OF THE WATER CORPORATION. IT SHALL NOT BE COPIED WITHOUT PERMISSION.

CAD MANAGEMENT_NOT READ ONLY\WDCS\STANDARD DRAWINGS\MANUALS\PIPE FITTINGS\AY58\AY58-020-001-01F 15:47 16/10/2008 raccuif0/WS11376