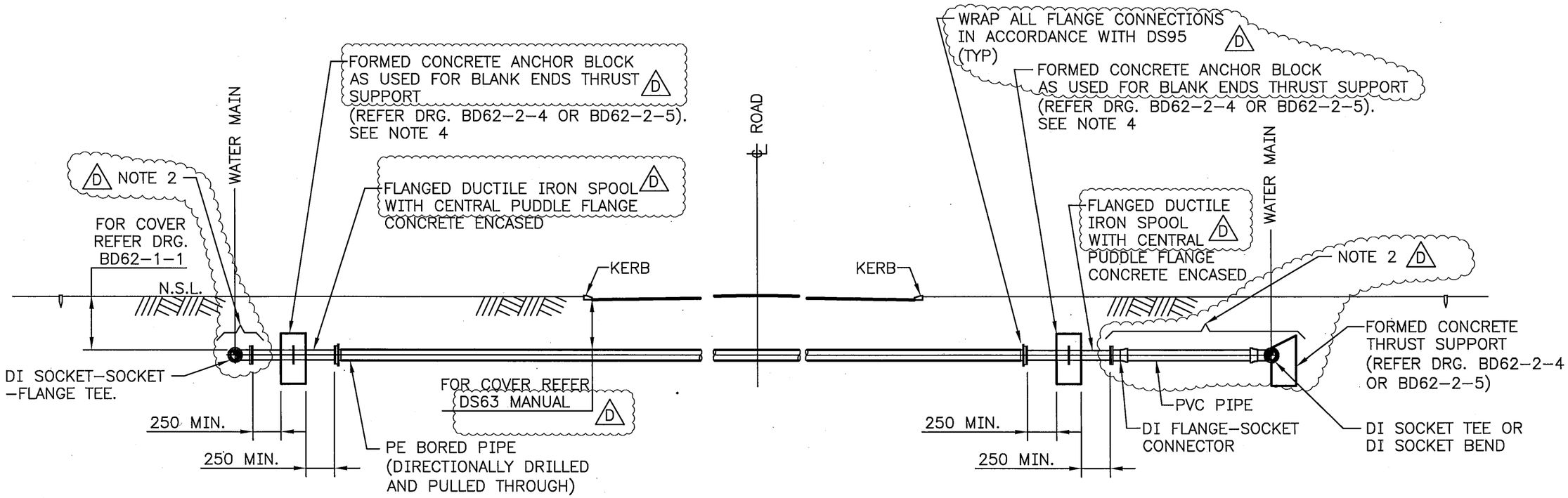

ELEVATION

NOTE:

1. THE PE BORED PIPE SHALL ONE PRESSURE RATING HIGHER THAN WOULD OTHERWISE BE REQUIRED USING OPEN-CUT METHODS TO ALLOW FOR SCRATCHES DURING INSTALLATION.(EG/FOR PN20 WATER RETICULATION PIPE USE PN25 PIPE TO BORE).
2. DRAWING SHOWS TWO ACCEPTABLE OPTIONS FOR CONNECTION OF ANCHOR BLOCKS TO MAIN. DESIGNER IS TO DETERMINE AND SPECIFY THE APPROPRIATE TYPE. D
3. SECTIONS OF PE BORED PIPE SHALL BE SEPARATELY PRESSURE TESTED PRIOR TO CONNECTION TO THE WATER RETICULATION PIPE.
4. CONCRETE ANCHOR BLOCK LOCATION SHALL BE DETERMINE BY THE CONSULTING ENGINEER. ANCHOR BLOCKS SHALL BE LOCATED IN STANDARD WATER/WASTEWATER ALIGNMENT WHERE PRACTICABLE AGREEMENT WITH THE RELEVANT AFFECTED UTILITY MUST BE OBTAINED FOR OTHER ALIGNMENTS (REFER UTILITY PROVIDERS CODE OF PRACTICE) D

D

PIPE OUTSIDE DIAMETER (mm)	MAX. BORE/REAMER DIAMETER (mm)
125	170
180	255
250	310

ISSUE	DATE	GRID	REVISION	DRN	REC	APPD
D	04/2019		REVISED AS CLOUDED	MD	AA	AD
C	10/2010		APPROVED	BJ	CW	CW
B	06/2008		DRAWING ISSUED FOR CONSTRUCTION	GRC	CW	CW

SCALE : DIAGRAMMATIC

DES CALC
M MACRAE
DES CHD
J DAVIES
DRN
F RACCUIA
Q.C. CHD
C WOOLFORD

RECOMMENDED 10/06/2008
C WOOLFORD (SIGNED)
SENIOR ENGINEER, W&D, C&S

APPROVED 10/06/2008
P FINLAY (SIGNED)
PRINCIPAL ENGINEER, W&D, C&S

WATER CORPORATION

WATER RETICULATION
STANDARD DRAWINGS
BORED PIPE UNDER ROAD – SOIL NOT CONTAINING ROCK
TYPICAL ARRANGEMENT – DN100 UP TO DN250

FILE JT1 2007 04987
PROJECT
PLAN BD62-8-36
CAD
ISSUE D

ORIGINAL SHEET SIZE A3

MF 10 APR 2019

283
394

© THIS DRAWING IS THE PROPERTY OF THE WATER CORPORATION. IT SHALL NOT BE COPIED WITHOUT PERMISSION.

CAD MANAGEMENT_NOT READ ONLY\WDCS\STANDARD DRAWINGS\DS63\BD62\BD62-008-036-01D 16:06 09/04/2019 raccuif0/WS27102