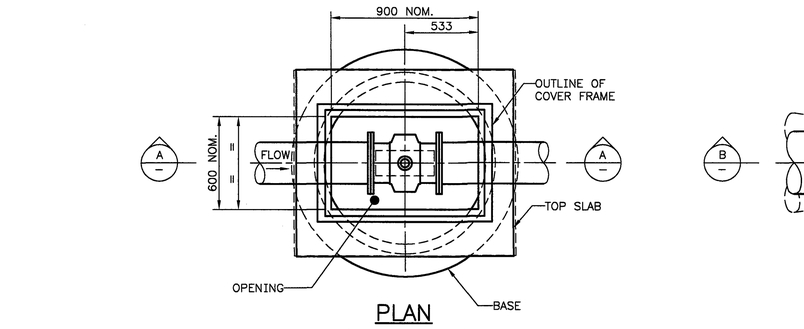

PLAN
(COVER NOT SHOWN)
SCALE 2

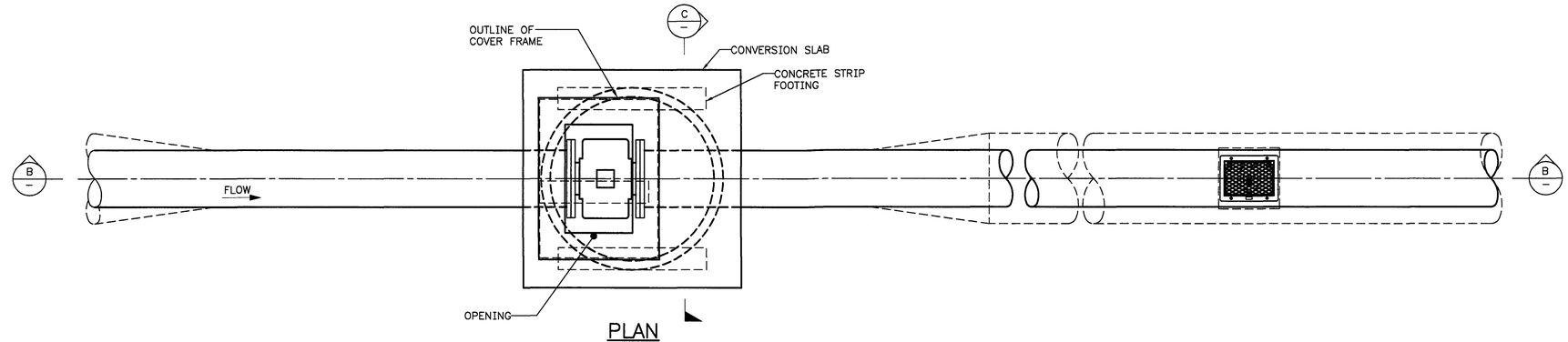

PLAN
(COVER NOT SHOWN)
SCALE 1

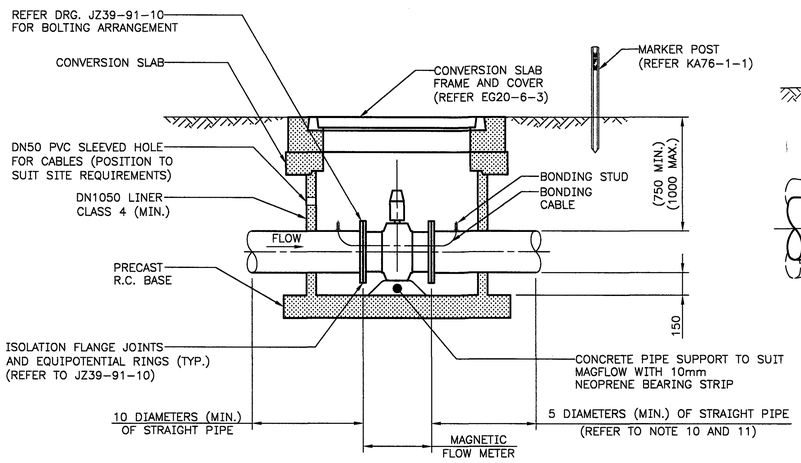

<DN300 ARRANGEMENT

SECTION A
SCALE 2

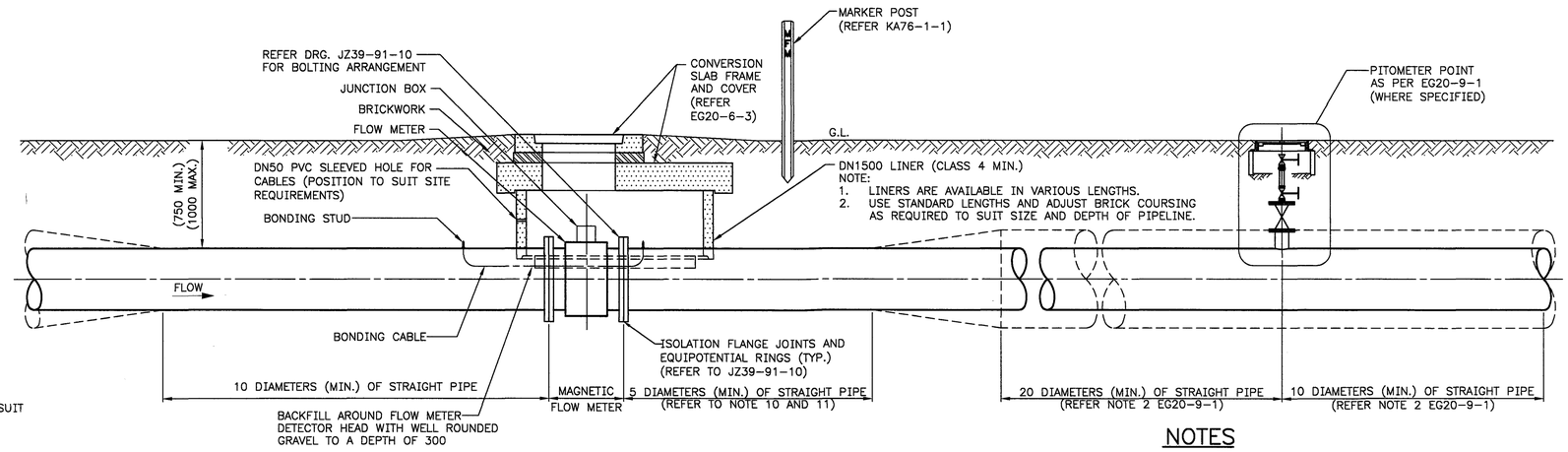

≥DN300 ARRANGEMENT

SECTION B
SCALE 1

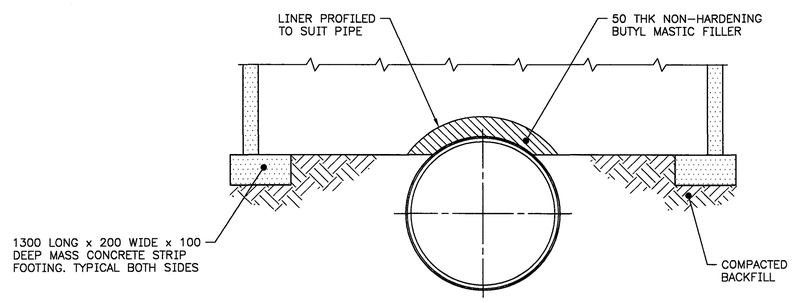

SECTION C
SCALE 3

1 (1:25 AT A1) 500 0 500 1000 1500 mm
2 (1:20 AT A1) 500 0 500 1000 mm
3 (1:10 AT A1) 100 50 0 100 200 300 400 500 600 700 mm

NOTES

1. FLOW METERS TO BE INSTALLED ABOVE GROUND WHERE POSSIBLE. WHERE METER IS ABOVE GROUND INSTALL SUNSHADE AS PER EG20-4-4 OR SIMILAR.
2. MAGNETIC FLOW METER AND FLANGES TO BE COMPLETELY WRAPPED IN ACCORDANCE WITH DS95 SPECIFICATION 'L1' – TAPE WRAPING.
3. MAIN PIPELINE BONDING CABLE TO BE 70mm² STRANDED COPPER SINGLE CORE CONDUCTOR
4. PIPELINE BOND STUDS TO BE M12 316L STAINLESS STEEL WELDED TO ADJACENT PIPE SPOOLS USING E309MoL WELDING ELECTRODE OR SIMILAR.
5. CHECK FLANGE BOLT HOLES AND FACES FOR BURRS PRIOR TO INSTALLATION OF INSULATION SLEEVES.
6. TESTING OF THE INSULATION BETWEEN THE FLOW METER FLANGE AND THE PIPELINE FLANGE TO BE CARRIED OUT WITH A MULTIMETER.
7. FLANGE CLASS TO SUIT THE PRESSURE RATING OF THE MAIN PIPELINE.
8. THE INSTALLER MUST PROTECT THE FLOW METER JUNCTION BOX FROM BEING IMMERSED IN WATER UNTIL IT IS COMPLETELY WATERPROOF. THE FLOW METER MAY BE PERMANENTLY DAMAGED IF IT IS IMMERSED PRIOR TO IT BEING WATERPROOFED. THE MAGNETIC FLOW METER IS NOT CONSIDERED WATERPROOF UNTIL:
   – THE CABLES HAVE BEEN INSTALLED
   – THE JUNCTION BOX HAS BEEN POTTED AND
   – THE INSTALLATION HAS BEEN INSPECTED AND SIGNED OFF BY A WATER CORPORATION INSPECTOR.
9. PIPELINE VOLTAGE MITIGATION TO BE ASSESSED ON A PROJECT SPECIFIC BASIS.
10. BI-DIRECTIONAL FLOW METER INSTALLATION SHALL HAVE MINIMUM 10 DIAMETERS OF STRAIGHT PIPE ON BOTH SIDES OF THE METER.
11. MINIMUM LENGTHS STATED MAY BE REDUCED IF:
    a. SITE CONSTRAINTS PREVENT ACHIEVING MINIMUM LENGTHS.
    b. DOCUMENTED APPROVAL FROM FLOW METER SUPPLIER IS PROVIDED.
12. EQUALISATION (EARTHING) RINGS (2 OFF) MUST BE REQUESTED TO BE SUPPLIED WITH FLOW METER.
13. VERTICAL AND HORIZONTAL TAPPINGS TO BE INSTALLED AS PER PROJECT SPECIFIC REQUIREMENTS
14. BURIED MAGNETIC FLOW METERS NOT TO BE LOCATED UNDER ROAD PAVEMENTS.
15. FILL UNDER FOOTINGS OR BASE TO BE COMPACTED TO 92% MMDD OR AS PER PIPELINE EMBEDMENT WHICHEVER IS GREATER.
16. CONCRETE PENETRATIONS AND PROFILINGS TO LINER TO BE SEALED BY APPLYING FOSROC NITO PRIME ZINC RICH TO EXPOSED REINFORCEMENT AND FILLING GAP WITH NON-HARDENING BUTYL MASTIC.
17. FOR NON-METALLIC PIPE BONDING STUDS AND BONDING CABLES ARE NOT REQUIRED.
18. NO PART OF LINER, FOOTING, OR SEALING COMPOUND SHALL EXERT LOAD ON PIPE.

ISSUE	DATE	GRID	REVISION	DRN	REC	APPD
E	06/2018		LESS THAN DN300 ARRANGEMENT ADDED, JZ39-91-10 REFERENCE ADDED	BJ		
D	01/2016		SHEET TITLE, NOTES, LENGTH OF STRAIGHT PIPE REQUIREMENTS AMENDED. DIRECT BURIED OPTION AND STRAUB REMOVED	FR	LD	JD
C	11/2008		STANDARD MARKER POST & INSTALLATION REQUIREMENTS OF PITOMETER ADDED	KLM	GG	JD
B	10/2004		ITEM 9 DETAIL 1 SS REMOVED FROM DESCRIPTION	KLM	SM	JD

566
810

SURVEY BOOKS

VERTICAL DATUM NONE
COORDINATE SYS NONE
DES REF

DES CALC T WILLCOCKS
DES CHD J DAVIES
DRN K MCGREGOR
Q.C. CHD D OWENS

NORTH POINT

INFRASTRUCTURE DESIGN BRANCH

RECOMMENDED 06/09/2004
T WILLCOCKS (SIGNED)
PRINCIPAL ENGINEER
APPROVED 06/09/2004
J DAVIES (SIGNED)
for MANAGER ID BRANCH

WATER CORPORATION

WATER SUPPLY DISTRIBUTION
STANDARD DRAWINGS
MAGNETIC FLOW METER INSTALLATION – EXAMPLE DRAWING

FILE
PROJECT
PLAN EG20-4-2
CAD
ISSUE E

ORIGINAL SHEET SIZE A1

MF 08 JUL 2019

© THIS DRAWING IS THE PROPERTY OF THE WATER CORPORATION. IT SHALL NOT BE COPIED WITHOUT PERMISSION.

CAD MANAGEMENT_NOT READ ONLY\WDCS\STANDARD DRAWINGS\DS 60\EG20\EG20-004-002-01E 09:02 18/06/2019 JEFFERB1/WS33978