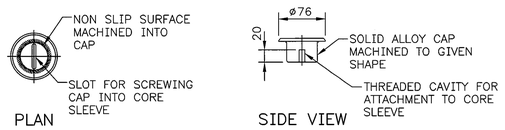

TYPICAL CAP FOR KENNEDY TEMPORARY GUARDRAIL POST BASE

SCALE 2

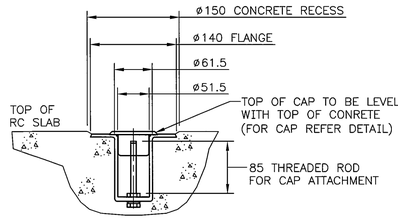

DETAIL 1 / –

TYPICAL ASSEMBLY OF CAST IN KENNEDY TEMPORARY GUARDRAIL POST BASE WITH CAP

(4 REQUIRED)

SCALE 2

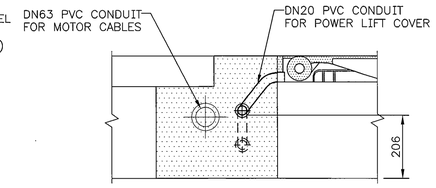

SECTION A / –

SCALE 3

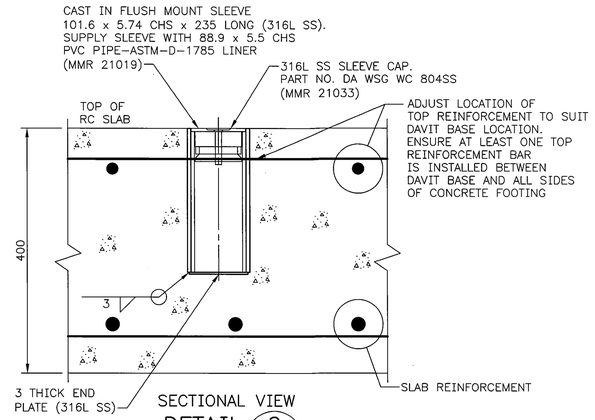

DETAIL 2 / –

TYPICAL FLUSH MOUNTED DAVIT BASE WITH BASE

(3 REQUIRED)

SCALE 2

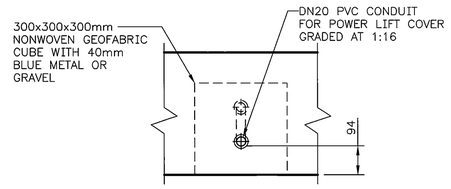

VIEW B / –

SCALE 3

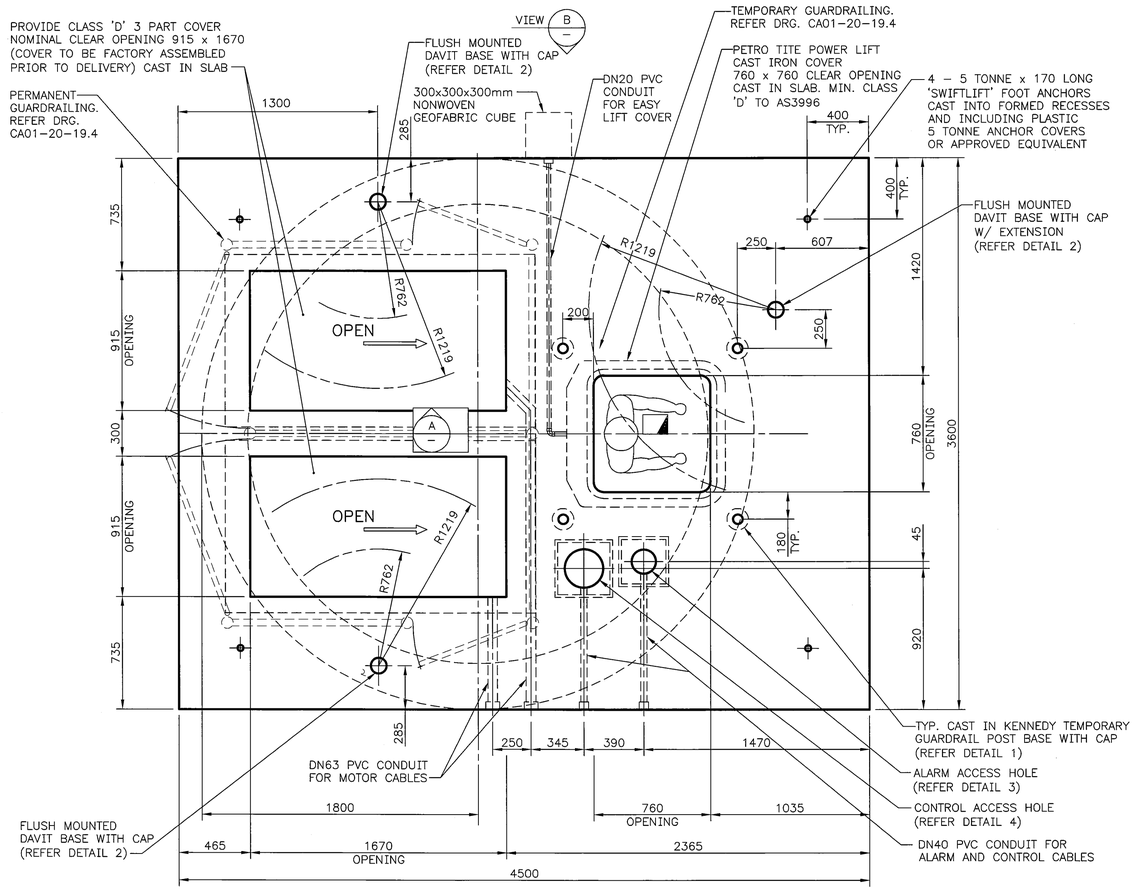

PLAN

SCALE 1

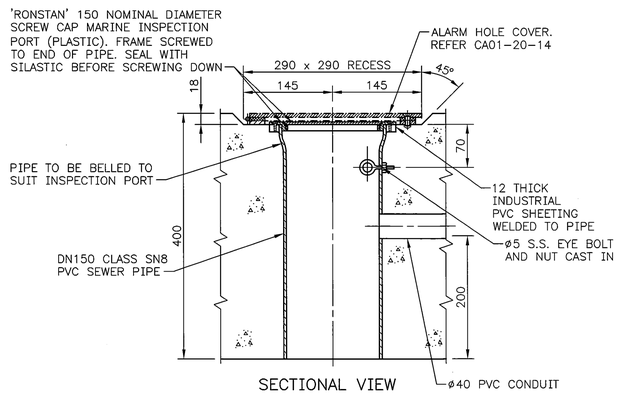

DETAIL 3 / –

ALARM ACCESS HOLE DETAIL

(1 REQUIRED)

SCALE 2

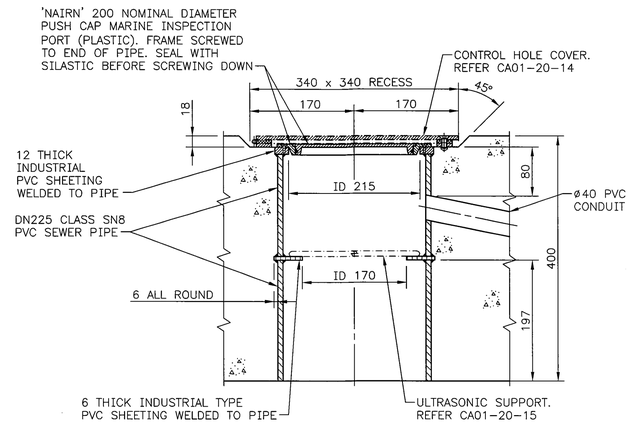

DETAIL 4 / –

CONTROL ACCESS HOLE DETAIL

(1 REQUIRED)

SCALE 2

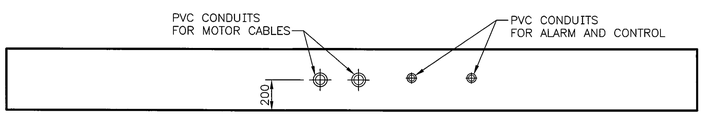

ELEVATION

SCALE 1

Pumping Well And Valve Pit Cover Slabs May Need To Be Mirrored To Suit Position Of Electrical Slab Area On General Arrangement

REFERENCE DRAWINGS

COMMON SPECIFICATION NOTES	CA01–1–3
SITE PLAN (TYPE 90 EXAMPLE)	CA01–3–2
PUMP WELL – STRUCTURAL DETAILS	CA01–20–3
TYPE 90 PUMPING STATION – PUMP WELL – TOP SLAB WITH PERMANENT GUARDRAIL SYSTEM –	
REINFORCEMENT	CA01–20–8.4
TYPE 90 PUMPING STATION – PUMP WELL – PREVENTION OF FALLS	
GRATING ARRANGEMENT	CA01–20–19.1
GRATING DETAILS	CA01–20–19.2
TYPE 90 PUMPING STATION – PUMP WELL – PREVENTION OF FALLS WITH PERMANENT GUARDRAIL SYSTEM –	
GUARDRAIL DETAILS	CA01–20–19.4

FOR COMMON SPECIFICATION NOTES REFER DRAWING CA01–1–3

Design Engineer shall modify electrical cabinet location, conduit details and dimensions to match Electrical Designer's requirements.

(3) 100 50 0 100 200 300 400 500 600 700 mm (1:10 AT A1)

(2) 100 50 0 100 200 300 mm (1:5 AT A1)

(1) 500 0 500 1000 mm (1:20 AT A1)

'Input' Indicates Information Required From Design Engineer

THIS DRAWING IS DERIVED FROM CA01–20–8–3D

ISSUE	DATE	GRID	REVISION	DRN	REC	APPD
D	05/2019		DELETE GENERAL NOTES & AMENDED REFERENCE DRAWINGS	VF	LL	KP
C	06/2018		GEOFABRIC CUBE DETAILS & GENERAL NOTES REVISED. REFERENCE TO 'CI/DI' ACCESS COVER FROM SLAB PLAN DELETED	BJ	LL	KP
B	05/2015		GUARDRAIL CONFIGURATION AMENDED, DN20 PVC CONDUIT FOR EASY LIFT COVER ADDED, DAVIT BASE MOVED	BJ	JD	DVDN

566
810

DESIGN SURVEY NONE	VERTICAL DATUM NONE	DES CALC N/A	NORTH POINT
	COORDINATE SYS NONE	DES CHD D. McADIE	
ASCON SURVEY NONE	DES REF	DRN F. RACCUIA	
		Q.C. CHD P. MIRCO	

'Input'
Designers Identification Label

RECOMMENDED 19/12/2011
S SELLATHURAI (SIGNED)
SENIOR ENGINEER, WWC & S

APPROVED 19/12/2011
D MCADIE (SIGNED)
PRINCIPAL ENGINEER, WWC & S

WATER CORPORATION

WASTEWATER – EXAMPLE DRAWING
WASTEWATER PUMPING STATIONS AND PRESSURE MAINS
TYPE 90 PUMPING STATION – PUMP WELL – TOP SLAB
WITH PERMANENT GUARDRAIL SYSTEM – ARRANGEMENT

FILE *'Input'* PROJECT *'Input'* PLAN CA01–20–8–3 CAD ISSUE D

ORIGINAL SHEET SIZE A1

MF 26 JUN 2019

© THIS DRAWING IS THE PROPERTY OF THE WATER CORPORATION. IT SHALL NOT BE COPIED WITHOUT PERMISSION.

CAD MANAGEMENT_NOT READ ONLY\WWCS\STANDARD DRAWINGS\PUMP STATIONS\CAD\CA01\REVISIONS\COMPLETE\CA01–020–008–03D 09:55 20/06/2019 farrelv1/WS23088