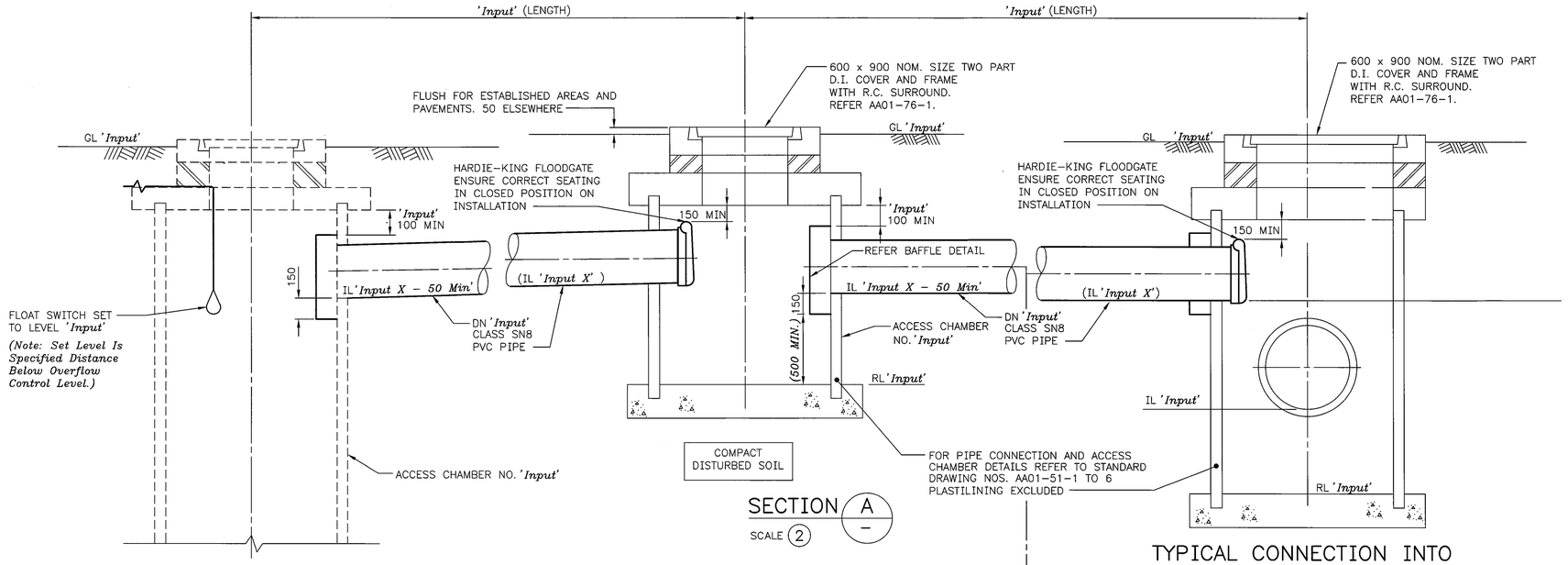

SECTION A
SCALE 2

TYPICAL CONNECTION INTO EXISTING PIPED DRAIN

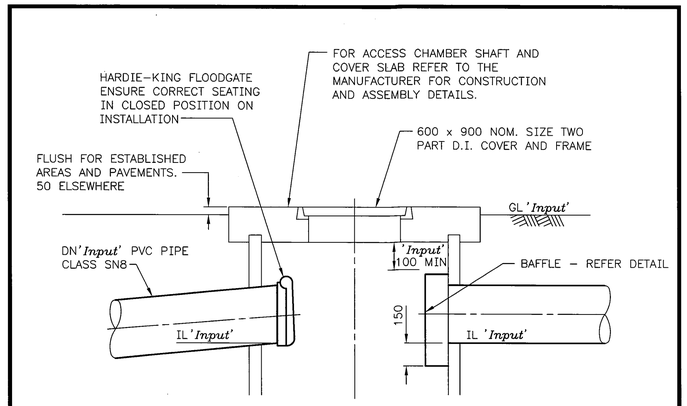

ALTERNATIVE ACCESS CHAMBER COVER ARRANGEMENT.
Design Engineer to select as appropriate for the available pipe cover.
SCALE 2

Upflow Area Shall Be At Least 1.5 Times The Cross Sectional Area Of Trapped Overflow Pipework

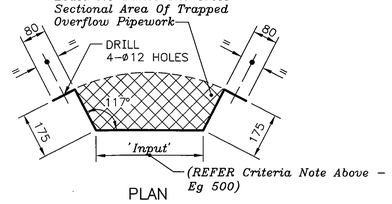

PLAN

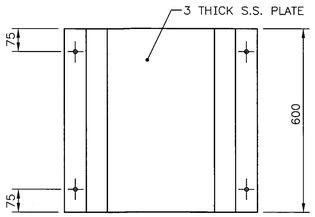

ELEVATION
2-OFF

BAFFLE DETAIL
SCALE 3

Compensating Basin Or Open Drain

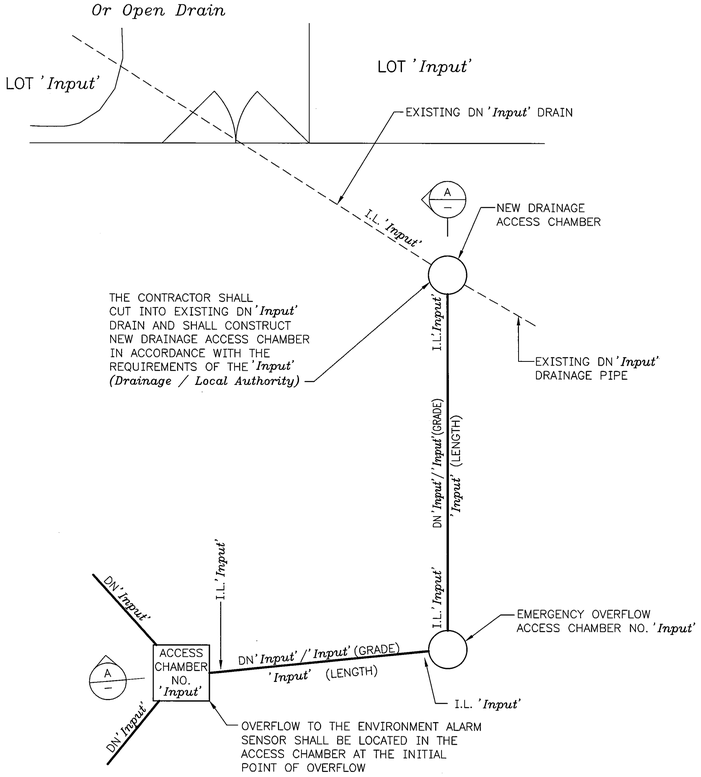

EMERGENCY OVERFLOW DISCHARGE ROUTE PLAN
(Typical - Design Engineer To Modify As Required)
SCALE 1

Delete Non Applicable Items

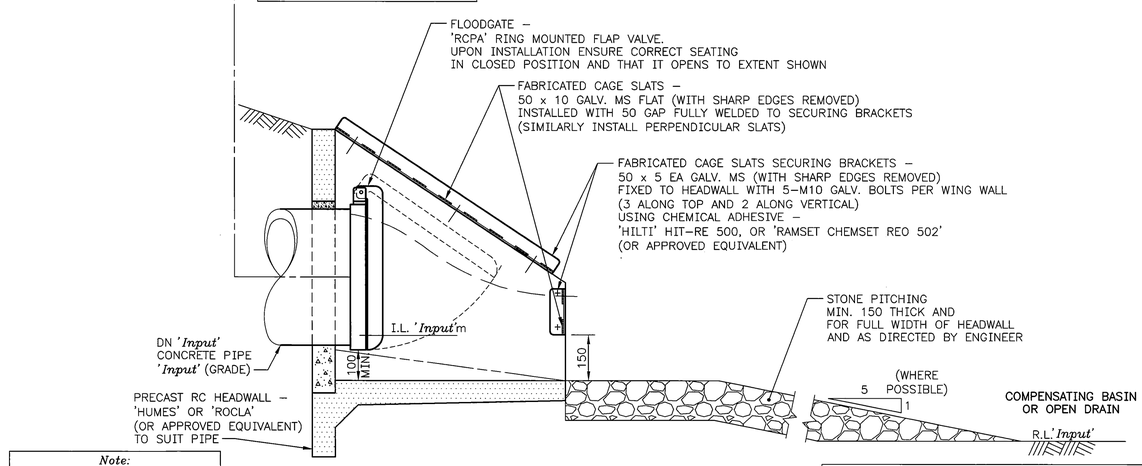

Note: Headwall may need to be larger than required to fit fabricated cage (e.g. DN375 conc. pipe but using DN525 suited headwall)

TYPICAL CONNECTION INTO COMPENSATING BASIN OR OPEN DRAIN
(FOR CONCRETE PIPES DN300 & GREATER)
(To Suit The Requirements Of The Drainage, Local And Environmental Authorities)
SCALE 3

Compensating Basin Or Open/Pipe Drain (Design Engineer Shall Specify And Show Discharge Area Protection Work As Required). In Undeveloped Areas, Stone Pitching Shall Be Extended Around Headwall to Prevent Erosion.

FOR COMMON SPECIFICATION NOTES REFER DRAWING CA01-1-3

GENERAL NOTES
1. STAINLESS STEEL BAFFLES SHALL BE GRADE 316L.
2. SS BAFFLES SHALL BE FIXED TO CONCRETE WALLS WITH M12 SS GRADE 316 MASONRY ANCHORS.
3. PVC PIPE SHALL BE SN8 TO AS/NZS 1260.

REFERENCE DRAWINGS

COMMON SPECIFICATION NOTES	CA01-1-3
SITE PLAN (TYPE 90 EXAMPLE)	CA01-3-2
EMERGENCY STORAGE TANK DETAILS	CA01-5-1

3 100 50 0 100 200 300 400 500 600 700 mm (1:10 AT A1)
2 500 0 500 1000 mm (1:20 AT A1)
1 1 0.5 0 1 2 3 4 5 6 7 m (1:100 AT A1)

'Input' Indicates Information Required From Design Engineer

THIS DRAWING IS DERIVED FROM CA01-5-4G

ISSUE	DATE	GRID	REVISION	DRN	REC	APPD
G	05/2019		AMEND GENERAL NOTES & REFERENCE DRAWINGS AND REMOVE REFERENCE TO WASTEWATER MANUAL & CI	VF	LL	KP
F	06/2018		COMPENSATING BASIN OR OPEN DRAIN EROSION PROTECTION INFORMATION REVISED ALSO DRAWING RE-ARRANGED	FR	LL	KP
E	11/2015		COMPENSATING BASIN OR OPEN DRAIN REVISED	FR	DVN	DM
D	09/2013		LADDERS REMOVED	KLM	ML	DM
C	04/2010		OVERFLOW TO THE ENVIRONMENT NOTE CHANGED, FLOAT	KLM	RN	SK

566
810

DESIGN SURVEY NONE
VERTICAL DATUM AHD
COORDINATE SYS NONE
ASCON SURVEY NONE
DES REF N/A
DES CALC J.C.B.
DES CHD N/A
DRN K.B.
Q.C. CHD P.R.M.
NORTH POINT 'Input'
'Input' Designers Identification Label
RECOMMENDED 27/05/1997 J.C. BOND (SIGNED) SUPERVISING ENGINEER
APPROVED 27/05/1997 E.J. MURPHY (SIGNED) MANAGER I.D. BRANCH

WATER CORPORATION

WASTEWATER - EXAMPLE DRAWING
WASTEWATER PUMPING STATIONS AND PRESSURE MAINS
TYPE 90 PUMPING STATIONS
EMERGENCY OVERFLOW DETAILS

FILE 'Input' | PLAN CA01-5-4 | CAD | ISSUE G
PROJECT 'Input'
ORIGINAL SHEET SIZE A1
MF 26 JUN 2019

© THIS DRAWING IS THE PROPERTY OF THE WATER CORPORATION. IT SHALL NOT BE COPIED WITHOUT PERMISSION.

CAD MANAGEMENT_NOT READ ONLY\WWCS\STANDARD DRAWINGS\PUMP STATIONS\CAD\CA01\REVISIONS\COMPLETE\CA01-005-004-01G 13:44 20/06/2019 farrelv1/WS23088