DocuSign Envelope ID: DBE73275-9E86-4F21-81D8-3759E35D5605

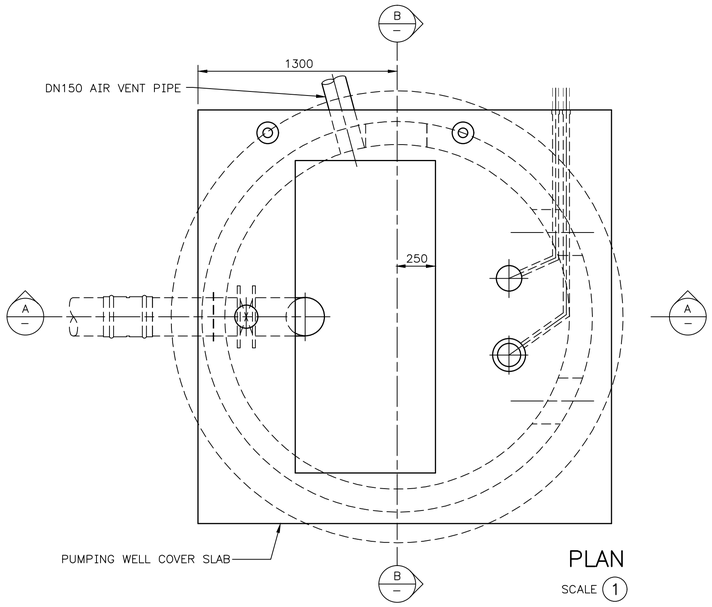

PLAN
SCALE 1

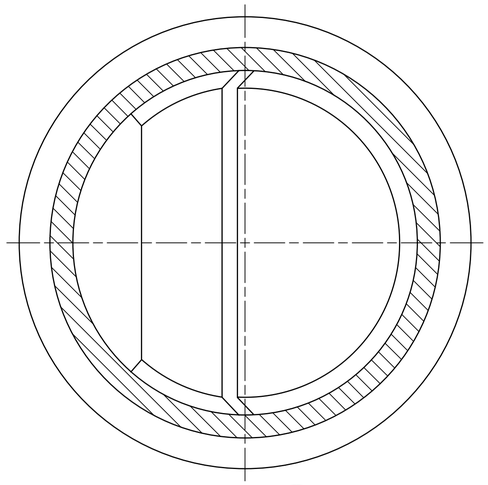

SECTION C
SCALE 1

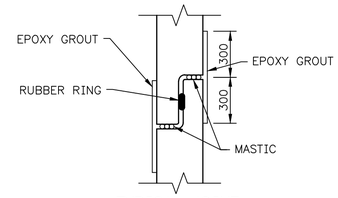

TYPICAL JOINT
TO MANUFACTURER'S DESIGN

DETAIL 2
SCALE : DIAGRAMMATIC

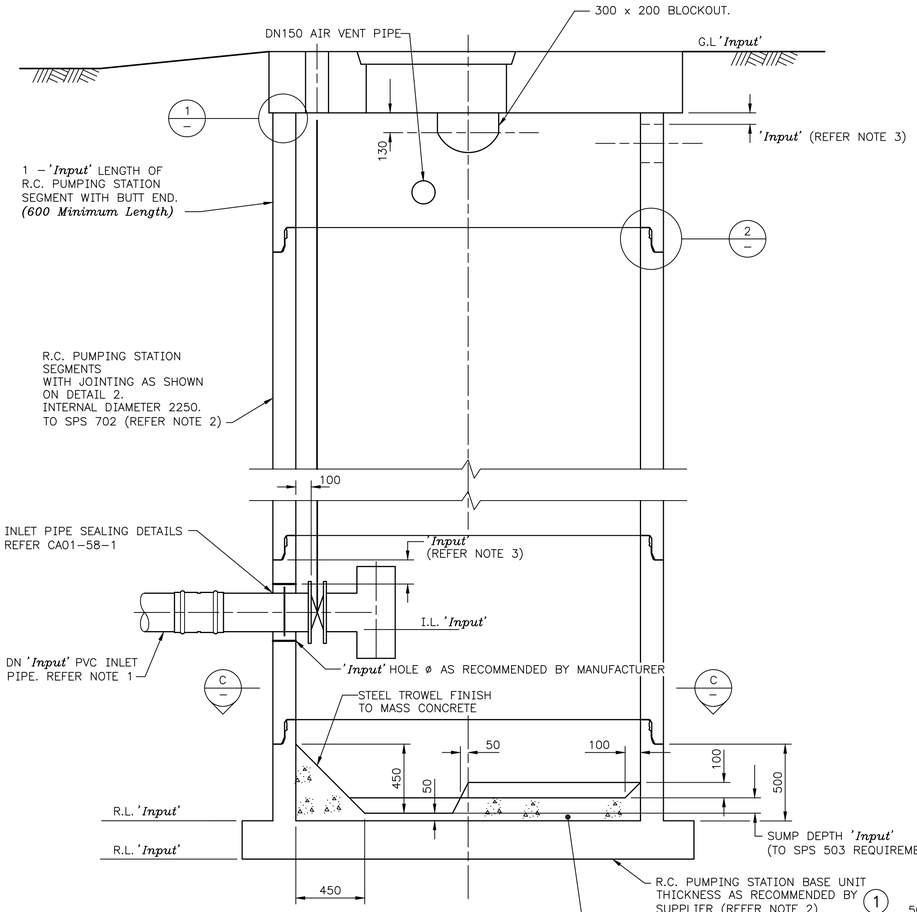

SECTION A
SCALE 1

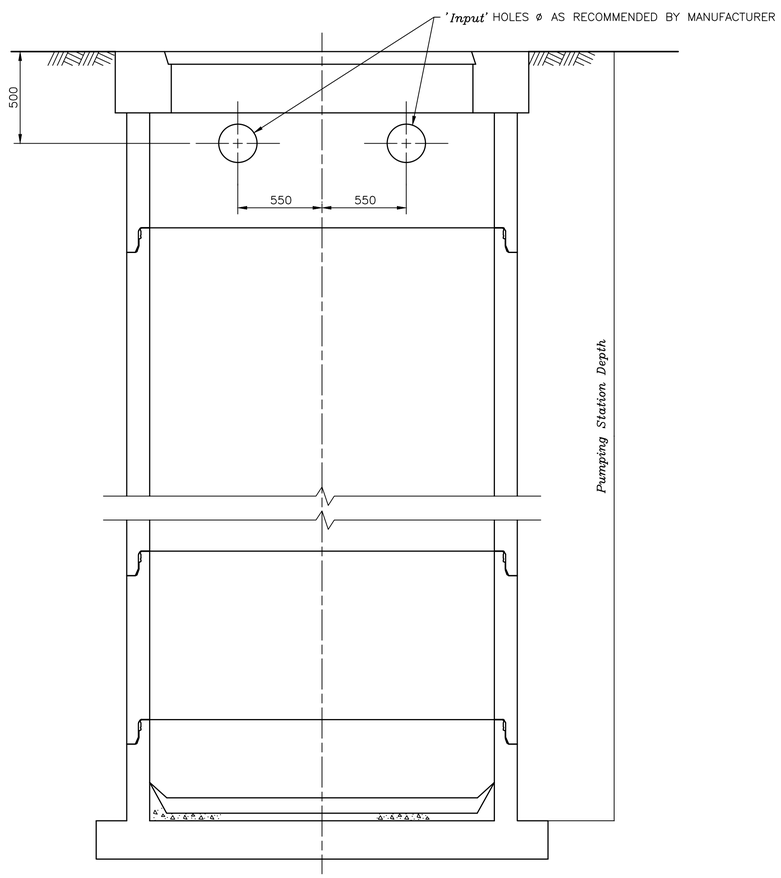

SECTION B
SCALE 1

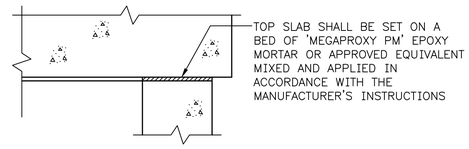

DETAIL 1
SCALE : DIAGRAMMATIC

FOR COMMON SPECIFICATION NOTES
REFER DRAWING CA01–1–3

GENERAL NOTES

1. BACKFILL BELOW AND AROUND INLET PIPES AND VALVE PITS SHALL BE COMPACTED IN ACCORDANCE WITH AS/NZS 2566.2 TO A PENETRATIVE RESISTANCE OF NOT LESS THAN 8 BLOWS / 300mm WHEN TESTED IN ACCORDANCE WITH AS 1289.6.3.3. OTHERWISE, INLET PIPES AND VALVE PITS SHALL BE PILED IN ACCORDANCE WITH SPECIFIED FOUNDATION DESIGN REQUIREMENTS.
2. ONLY PRECAST REINFORCED CONCRETE SYSTEMS WHOSE STRUCTURAL, JOINTING AND FLOTATION RESISTANCE CHARACTERISTICS HAVE BEEN AUTHORISED BY THE CORPORATION AND SELECTED BY THE DESIGNER TO MATCH ASSESSED SITE CONDITIONS SHALL BE PERMISSIBLE.
3. THE DISTANCE BETWEEN ANY PRECAST SYSTEM COMPONENT EDGE OR JOINT AND ANY CORED HOLE OR STRUCTURAL PENETRATION SHALL BE NOT LESS THAN THAT ACCEPTABLE TO THE MANUFACTURER'S ENGINEER.
4. UNREINFORCED CONCRETE AND CONCRETE TOPPING SHALL BE GRADE N25.
5. PUMPING STATION COMPONENTS SHALL BE SECURED TO PREVENT DAMAGE, INSTABILITY, MOVEMENT OR FLOTATION PRIOR TO COMPLETION OF ALL PUMPING STATION CONSTRUCTION AND BACKFILL OPERATIONS.

Notes for Design Engineer input

6. The design of precast pumping station and associated foundation support systems is a sole responsibility of the Design Engineer and shall, in accordance with the requirements of DS 51, address:
- *Pumping station structural, maintainability and environmental performance in place over a minimum 100 year design life for internal and external exposure classifications of D and B2 respectively, as defined in AS 3735;*
- *The findings of a geotechnical assessment of subsurface and foundation conditions for the proposed station depth and any designed support treatments;*

7. The design basis shall be verifiable by an accredited third party engineering design reviewer and shall be confirmed by providing input data on the drawings as follows:
- *The selected foundation support (direct–on–soil, piled, other) design treatment;*
- *The selected backfill material specifications, compaction test parameters (e.g. density ratio ≥ 95% maximum dry density), compaction test methodology and the sampling frequency intervals to be applied to compaction operations on site.*

REFERENCE DRAWINGS

COMMON SPECIFICATION NOTES	CA01–1–3
SITE PLAN (TYPE 40 EXAMPLE)	CA01–3–3
PRECAST SLABS AND COVERS – TEMP. GUARDRAIL SYSTEM	CA01–10–22–1
PRECAST SLABS AND COVERS – PERM. GUARDRAIL SYSTEM	CA01–10–22–2
INLET SEWER – SEALING DETAIL	CA01–58–1

1 500 0 500 1000 mm (SCALE 1:20 – A1 DRAWING)

2 1000 500 0 1000 2000 3000 mm (SCALE 1:50 – A1 DRAWING)

'Input' Indicates Information Required From Design Engineer.

THIS DRAWING IS DERIVED FROM CA01–15–22E

ISSUE	DATE	GRID	REVISION	DRN	REC	APPD
E	05/2022		INLET PIPE SEALING DETAILS AMENDED	PAM	CP	KP
D	05/2019		AMENDED GENERAL NOTES, REFERENCE DRAWINGS & PUMP STATION SECTION A	VF	LT	KP
C	05/2014		GENERAL REVISION	BJ	ML	DM
B	09/2013		GENERAL REVISION	DKN	ML	DM

DESIGN SURVEY NONE | VERTICAL DATUM AHD | COORDINATE SYS NONE | ASCON SURVEY NONE | DES REF N/A | DES CALC | DES CHD | DRN W SCHNEIDER | Q.C. CHD P MOORE | NORTH POINT

'Input' Designers Identification Label

RECOMMENDED 10/04/2003 JC BOND (SIGNED) PRINCIPAL ENGINEER
APPROVED 10/04/2003 E MURPHY (SIGNED) MANAGER I.D. BRANCH

WATER CORPORATION

SEWERAGE – EXAMPLE DRAWING
WASTEWATER PUMPING STATIONS AND PRESSURE MAINS
TYPE 40 PUMPING STATION WITH ELECTRICAL DECONTACTOR
STRUCTURAL DETAILS – PRECAST COMPONENTS

FILE 'Input' | PROJECT 'Input' | PLAN CA01–15–22 | CAD | ISSUE E | ORIGINAL SHEET SIZE A1 | MF

566 810

© THIS DRAWING IS THE PROPERTY OF THE WATER CORPORATION. IT SHALL NOT BE COPIED WITHOUT PERMISSION.

CAD MANAGEMENT_NOT READ ONLY\WWCS\STANDARD DRAWINGS\PUMP STATIONS\CAD\CA01 – 2022\CA01–015–022–01E 08:03 08/09/2022 MIRCOPO/NB41268