DocuSign Envelope ID: B61BDA7E-52E7-4622-95EB-A3D80DFA116A

NOTE

ALL CONDUITS INCLUDING UNUSED CONDUITS TO BE SEALED AROUND WITH CROMMELIN SUPERSEAL IMPREGNATED FLEXIBLE FOAM

NUMBERING OF PUMPS

1. THE PUMPS SHALL BE LABELLED SUCH THAT WHEN FACING THE INLET PIPE THE NO.1 PUMP IS ON THE LEFT
2. PRINT PUMP NUMBERS BOTH INTERNALLY AND EXTERNALLY ON THE WET WELL AS FOLLOWS: EXTERNAL NUMBERS SHALL BE 150 HIGH PRINTED ON THE CONCRETE SURROUND WITH YELLOW ROAD MARKING PAINT. THE NUMBERS SHALL BE ORIENTATED TO BE READABLE WHEN FACING THE INLET PIPE. INTERNAL NUMBERS SHALL BE 125 HIGH RED ACRYLIC GLUED TO THE CONCRETE SLAB ADJACENT TO THE SLIDE RAIL. NUMBERS ARE AVAILABLE FROM "THE PLASTIC DISPLAY PEOPLE" OSBORNE PARK, WA 6017.
3. PUMPS SHALL BE TAGGED WITH A STAINLESS STEEL TAG ATTACHED TO THE PUMP LIFTING BRIDLE STATING PUMP STATION NAME AND NUMBER.

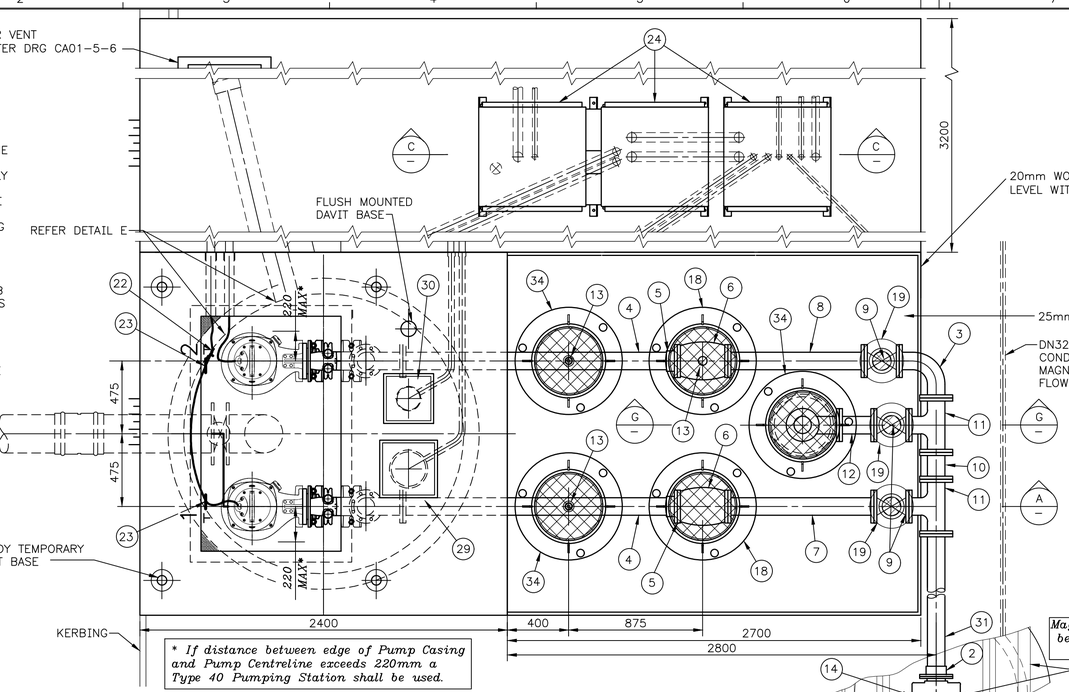

* If distance between edge of Pump Casing and Pump Centreline exceeds 220mm a Type 40 Pumping Station shall be used.

PLAN

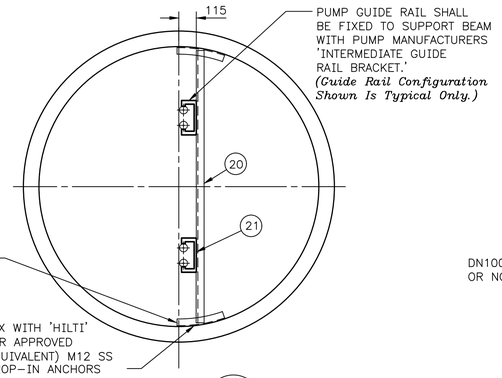

SECTION B
(SHOWING PUMP GUIDE RAIL SUPPORT BEAM ONLY)

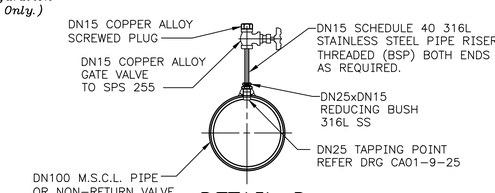

DETAIL D
3 - OFF
SCALE: DIAGRAMMATIC

FOR COMMON SPECIFICATION NOTES REFER DRAWING CA01-1-3

ADDITIONAL NOTES:

1. *Pump base plate fixing anchor ('Hilti' Hkd) length and diameter to be in accordance with pump supplier's specification. Design Engineer to determine this requirement and amend drawing if required.*
2. *If Mark 33 is not a DN100 Flygt Discharge Bend a flanged eccentric reducer is required.*
3. *Conduit sizes and arrangement shall be confirmed by the Design (Electrical) Engineer.*
4. *Design Engineer to ensure that pumps can be installed through cover opening.*
5. *Overflow to environment alarm sensor to be located in the access chamber from which the overflow will occur. If overflow alarm float ball is located >250m from pumping station then a separate remote Scada system is to be installed at location of overflow alarm.*

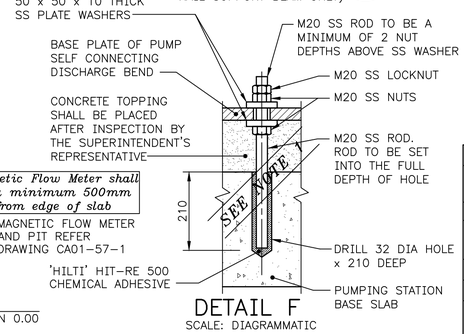

DETAIL F
SCALE: DIAGRAMMATIC

MARK	DESCRIPTION	MAT.	NO.OFF	REMARKS
34	DN375 CLASS D MAINTENANCE SHAFT COVER	CI/DI	3	STRATEGIC PRODUCT REGISTER
33	DN100 x DN100 FLYGT DISCHARGE BEND	DI	2	TO SPS 503 (REFER NOTE 2)
32	CLAW ADAPTOR	DI	2	WHEN REQUIRED
31	DN100 FLANGE TO PLAIN END PIPE	MSCL	1	CA01-9-25
30	ALARM HOLE COVER (ø150 HOLE)	SS	1	CA01-9-28
29	CONTROL HOLE COVER (ø200 HOLE)	SS	1	CA01-9-28
28	DN 'Input' STRAIGHT COUPLING x 2 RUBBER RING SOCKETS	PVC	1	
27	DN 'Input' INLET PIPE	SS	1	CA01-9-8
26	DN 'Input' SS FLANGED KNIFE-GATE VALVE WITH SS SPINDLE EXTENSION AND GUIDE BRACKETS	SS	1	TO SPS 259 (VALVE) CA01-1-4 (BRACKETS)
25	DN 'Input' INLET TEE	SS	1	CA01-9-8
24	ELECTRICAL SWITCHBOARD	-	1	REFER ELEC. DRGS
23	PUMP POWER CABLE LANYARD ASSEMBLY	SS	2	CA01-9-8
22	LIFTING CHAIN & PUMP CABLE HOOK	SS	3	CA01-9-6
21	INTERMEDIATE GUIDE RAIL BRACKET (2 per support)	SS	'Input'	
20	GUIDE RAIL SUPPORT BEAM	SS	'Input'	CA01-9-6
19	SLUICE VALVE-INSPECTION COVER & FRAME	CI	3	AQ71-1-4
18	DN450 CLASS D MAINTENANCE SHAFT COVER	DI	2	STRATEGIC PRODUCT REGISTER
17	DN100 MALE CAMLOCK ADAPTER	AL.	1	
16	DN100 x DN 'Input' FLANGE-SOCKET TAPER	DI	1	CA01-1-3
15	DN100 FLANGE TO PLAIN END PIPE	MSCL	1	CA01-9-25
14	DN100 MAGNETIC FLOW METER	-	1	
13	DN25 TAPPING POINT		3	CA01-9-25
12	DN100 HYDRANT RISER - 225 LONG	DI	1	CA01-1-3
11	DN100 x DN100 FLANGED TEE	DI	2	CA01-1-3
10	DN100 FLANGED PIPE x 175 LONG	DI	1	CA01-1-3
9	DN100 GATE VALVE - RESILIENT SEATED	CI	3	SPS 272
8	DN100 FLANGED PIPE x 890 LONG	DI	1	CA01-1-3
7	DN100 FLANGED PIPE x 953 LONG	DI	1	CA01-1-3
6	DN100 SWING CHECK NRV WITH RESILIENT SEATED DISC	CI	2	SPS 223
5	DN100 UNI-FLANGE ASSEMBLY	DI	3	CA01-1-3
4	DN100 FLANGE TO PLAIN END PIPE WITH TAPPING POINT	MSCL	2	CA01-9-25
3	DN100 x 90° FLANGED BEND	DI	4	CA01-1-3
2	DN100 SLIP ON FLANGE	MS	3	CA01-9-25
1	DN100 FLANGE TO PLAIN END PIPE	MSCL	2	CA01-9-25

MATERIAL LIST

THIS DRAWING IS DERIVED FROM CA01-9-20K

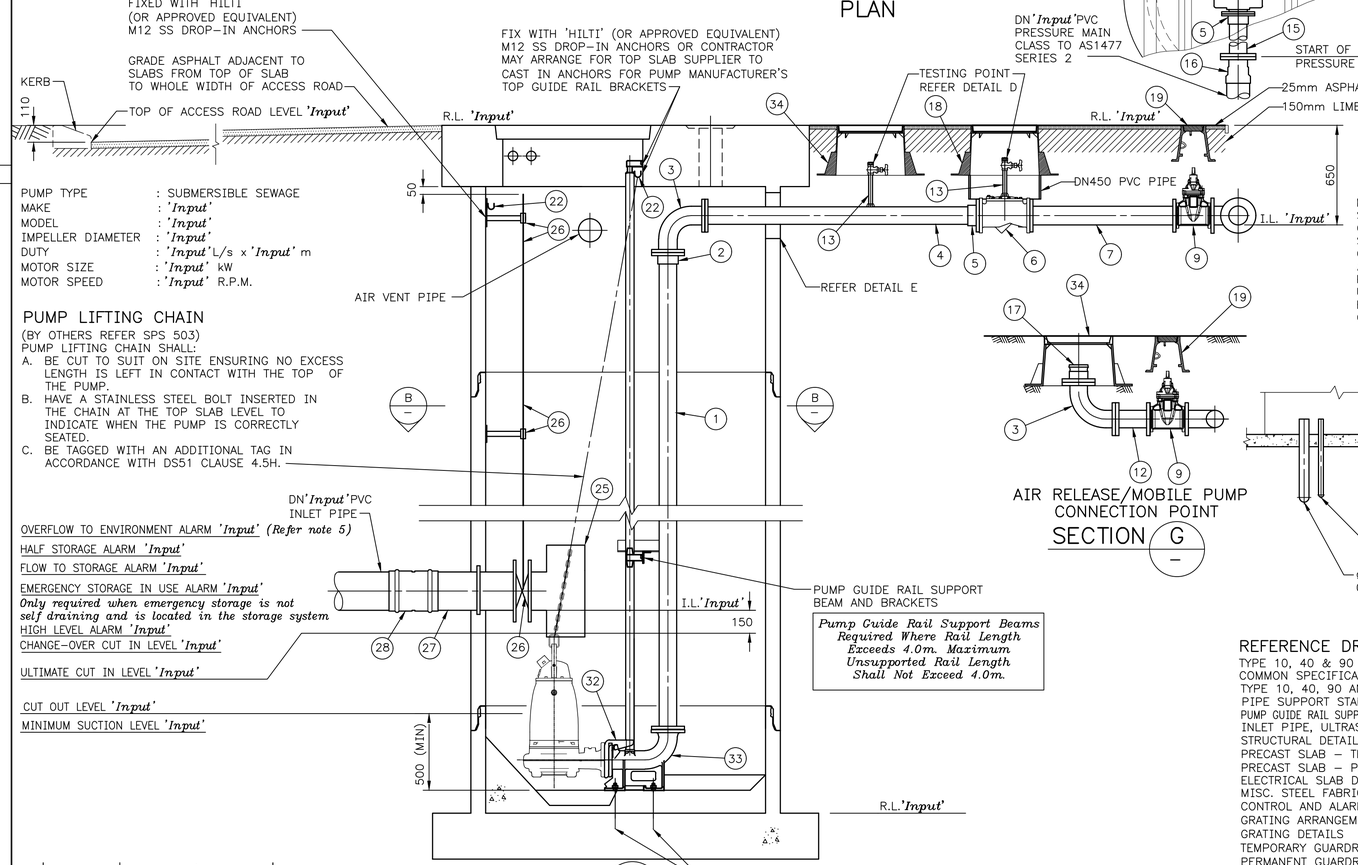

Pump Guide Rail Support Beams Required Where Rail Length Exceeds 4.0m. Maximum Unsupported Rail Length Shall Not Exceed 4.0m.

SECTION A

PUMP TYPE	: SUBMERSIBLE SEWAGE
MAKE	: 'Input'
MODEL	: 'Input'
IMPELLER DIAMETER	: 'Input'
DUTY	: 'Input' L/s x 'Input' m
MOTOR SIZE	: 'Input' kW
MOTOR SPEED	: 'Input' R.P.M.

PUMP LIFTING CHAIN

(BY OTHERS REFER SPS 503)
PUMP LIFTING CHAIN SHALL:

A. BE CUT TO SUIT ON SITE ENSURING NO EXCESS LENGTH IS LEFT IN CONTACT WITH THE TOP OF THE PUMP.
B. HAVE A STAINLESS STEEL BOLT INSERTED IN THE CHAIN AT THE TOP SLAB LEVEL TO INDICATE WHEN THE PUMP IS CORRECTLY SEATED.
C. BE TAGGED WITH AN ADDITIONAL TAG IN ACCORDANCE WITH DS51 CLAUSE 4.5H.

AIR RELEASE/MOBILE PUMP CONNECTION POINT

SECTION G

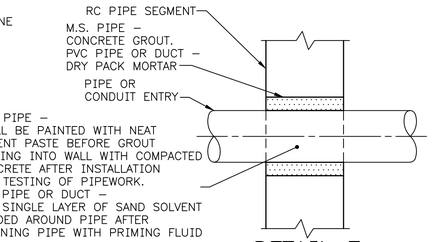

DETAIL E
SCALE: DIAGRAMMATIC

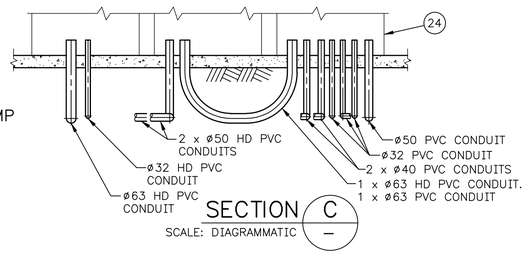

SECTION C
SCALE: DIAGRAMMATIC

REFERENCE DRAWINGS

TYPE 10, 40 & 90 PUMPING STATIONS	CA01-1-3
COMMON SPECIFICATION NOTES	
TYPE 10, 40, 90 AND 180 PUMPING STATIONS AND VALVE PITS - PIPE SUPPORT STAND, VALVE SPINDLE EXTENSION & GUIDE DETAILS	CA01-1-4
PUMP GUIDE RAIL SUPPORT, LIFTING CHAIN HOOK AND LIFTING CHAIN DETAILS - WET WELL	CA01-9-6
INLET PIPE, ULTRASONIC SUPPORT & LANYARD DETAILS	CA01-9-8
STRUCTURAL DETAILS - PRECAST COMPONENTS	CA01-9-22
PRECAST SLAB - TEMPORARY GUARDRAIL SYSTEM	CA01-9-23.1
PRECAST SLAB - PERMANENT GUARDRAIL SYSTEM	CA01-9-23.2
ELECTRICAL SLAB DETAILS	CA01-9-24
MISC. STEEL FABRICATION DETAILS	CA01-9-25
CONTROL AND ALARM HOLE COVERS	CA01-9-28
GRATING ARRANGEMENT	CA01-9-29
GRATING DETAILS	CA01-9-30
TEMPORARY GUARDRAIL SYSTEM - GUARDRAIL DETAILS	CA01-9-31
PERMANENT GUARDRAIL SYSTEM - GUARDRAIL DETAILS	CA01-9-32
MAGNETIC FLOW METER INSTALLATION - SHALLOW ARRANGEMENT	CA01-57-1
RPZ BACKFLOW PREVENTION DEVICE	CA01-70-1

'Input' Indicates Information Required From The Design Engineer

ISSUE	DATE	GRID	REVISION	DRN	REC	APPD
K	06/2023		PUMP NOTE 2 AMENDED	PAM	CD	KP
J	05/2019		AMEND MATERIAL LIST, ANCHORS, PUMP STATION BASE SEGMENT DETAILS AND MAG FLOW DETAIL.	VF	LT	KP
I	06/2018		ACCESS ROAD, ELECTRICAL SLAB, ALARM/CONTROL LEVELS & GENERAL REVISION	FR	LL	KP
H	02/2017		REFERENCE DRAWING TITLES AND MATERIAL LIST AMENDED	BJ	ML	KP

566
810

DESIGN SURVEY NONE	VERTICAL DATUM AHD	DES CALC	NORTH POINT
	COORDINATE SYS NONE	DES CHD	
ASCON SURVEY NONE	DES REF N/A	DRN W SCHNEIDER	
		Q.C. CHD K BERG	

'Input'
Designers Identification Label

RECOMMENDED 10/04/2003
JC BOND (SIGNED)
PRINCIPAL ENGINEER

APPROVED 10/04/2003
E MURPHY (SIGNED)
MANAGER I.D. BRANCH

WATER CORPORATION

WASTEWATER - EXAMPLE DRAWING
WASTEWATER PUMPING STATIONS AND PRESSURE MAINS
TYPE 10 PUMPING STATION - NO VALVE PIT
GENERAL ARRANGEMENT

FILE	'Input'	PLAN	CAD	ISSUE	ORIGINAL SHEET SIZE
PROJECT	'Input'	CA01-9-20		K	A1

MF

© THIS DRAWING IS THE PROPERTY OF THE WATER CORPORATION. IT SHALL NOT BE COPIED WITHOUT PERMISSION.

CAD MANAGEMENT_NOT READ ONLY\WWCS\STANDARD DRAWINGS\PUMP STATIONS\CAD\CA01 - 2021\FOR DMS\CA01-009-020-01K 11:31 29/06/2023 MCGREGKO/WS31939