DocuSign Envelope ID: 7FC84044-6E42-408D-958B-EA0EB2639E0A

NOTE

ALL CONDUITS INCLUDING UNUSED CONDUITS TO BE SEALED AROUND WITH CROMMELIN SUPERSEAL IMPREGNATED FLEXIBLE FOAM

NUMBERING OF PUMPS

1. THE PUMPS SHALL BE LABELLED SUCH THAT WHEN FACING THE INLET PIPE THE NO.1 PUMP IS ON THE LEFT
2. PRINT PUMP NUMBERS BOTH INTERNALLY AND EXTERNALLY ON THE WET WELL AS FOLLOWS: EXTERNAL NUMBERS SHALL BE 150 HIGH PRINTED ON THE CONCRETE SURROUND WITH YELLOW ROAD MARKING PAINT. THE NUMBERS SHALL BE ORIENTATED TO BE READABLE WHEN FACING THE INLET PIPE. INTERNAL NUMBERS SHALL BE 125 HIGH RED ACRYLIC GLUED TO THE CONCRETE SLAB ADJACENT TO THE SLIDE RAIL. NUMBERS ARE AVAILABLE FROM "THE PLASTIC DISPLAY PEOPLE" OSBORNE PARK, WA 6017.
3. PUMPS SHALL BE TAGGED WITH A STAINLESS STEEL TAG ATTACHED TO THE PUMP LIFTING BRIDLE STATING PUMP STATION NAME AND NUMBER.

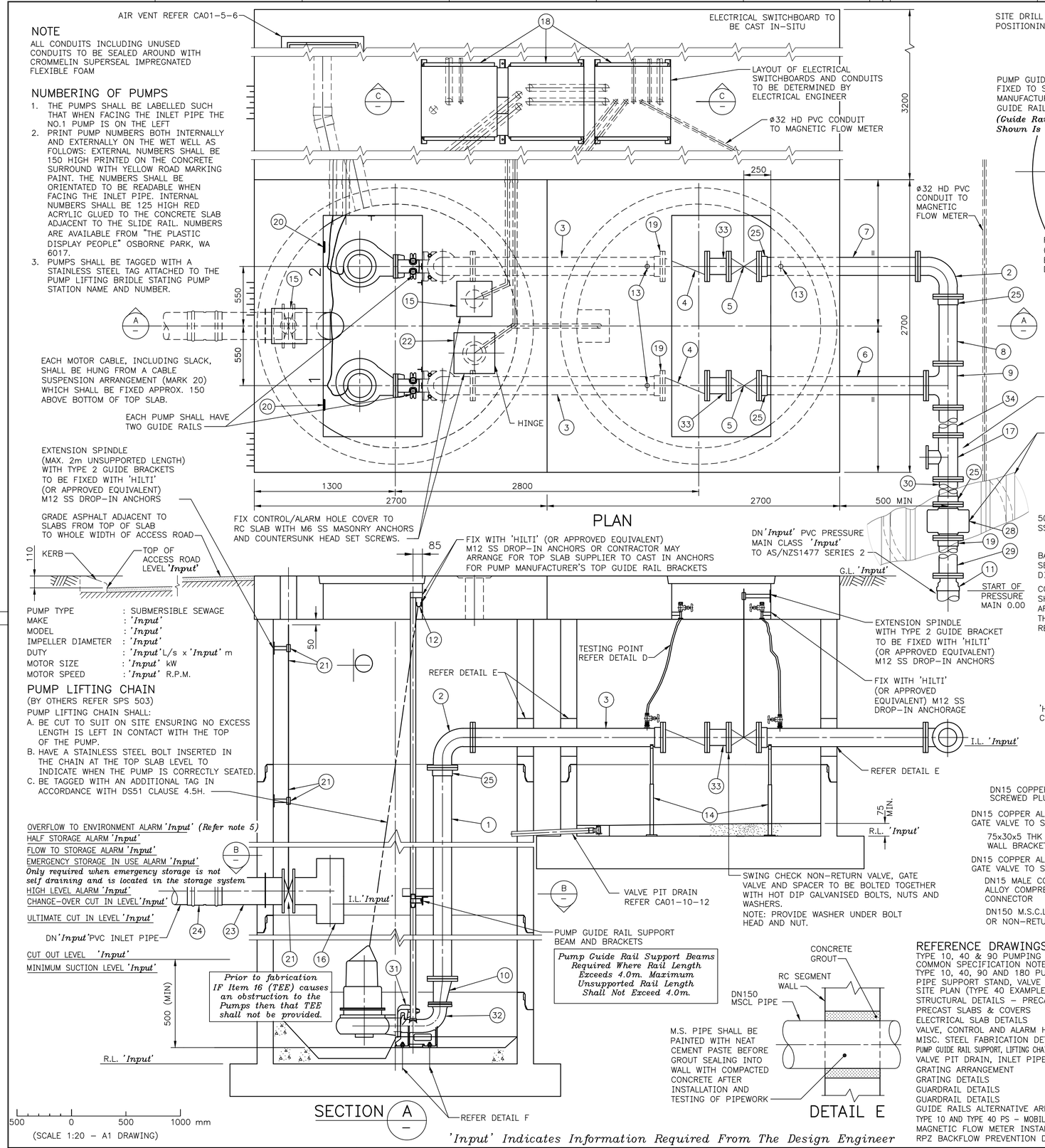

PUMP TYPE	: SUBMERSIBLE SEWAGE
MAKE	: 'Input'
MODEL	: 'Input'
IMPELLER DIAMETER	: 'Input'
DUTY	: 'Input' L/s x 'Input' m
MOTOR SIZE	: 'Input' kW
MOTOR SPEED	: 'Input' R.P.M.

PUMP LIFTING CHAIN

(BY OTHERS REFER SPS 503)

PUMP LIFTING CHAIN SHALL:

A. BE CUT TO SUIT ON SITE ENSURING NO EXCESS LENGTH IS LEFT IN CONTACT WITH THE TOP OF THE PUMP.
B. HAVE A STAINLESS STEEL BOLT INSERTED IN THE CHAIN AT THE TOP SLAB LEVEL TO INDICATE WHEN THE PUMP IS CORRECTLY SEATED.
C. BE TAGGED WITH AN ADDITIONAL TAG IN ACCORDANCE WITH DS51 CLAUSE 4.5H.

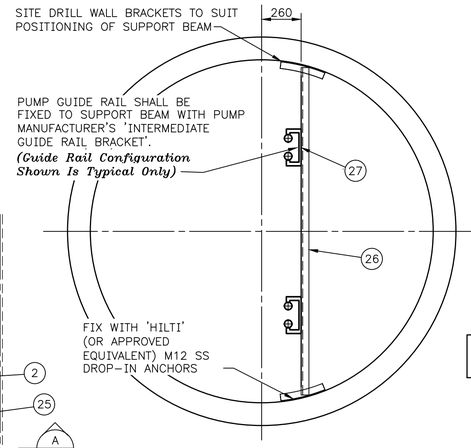

SECTION B

(SHOWING PUMP GUIDE RAIL SUPPORT BEAM ONLY)

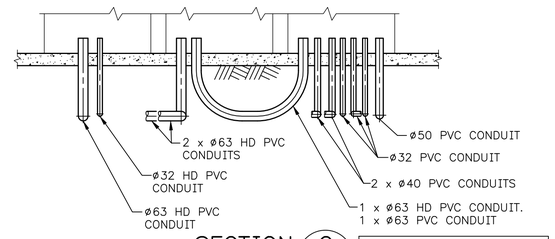

SECTION C

SCALE: DIAGRAMMATIC

This is Example Only Layout to be Determined by Electrical Engineer

FOR COMMON SPECIFICATION NOTES REFER DRAWING CA01-1-3

ADDITIONAL NOTES

1. *Pump base plate fixing anchor ('Hilti' Hkd) length and diameter to be in accordance with pump supplier's specification. Design Engineer to determine this requirement and amend drawing if required.*
2. *Mark 10 is typical for pump having DN100 discharge bend. Otherwise flanged, eccentric reducer not required.*
3. *Conduit sizes and arrangement shall be confirmed by the Design (Electrical) Engineer.*
4. *Design Engineer to ensure that pumps can be installed through cover opening. When not possible, the Design Engineer shall use the alternative arrangement with guide rails located underneath the top slab as shown on CA01-10-18 or consult with the Water Corporation for further advice.*
5. *Overflow to environment alarm sensor to be located in the access chamber from which the overflow will occur. If overflow alarm float ball is located >250m from pumping station then a separate remote Scada system is to be installed at location of overflow alarm.*
6. *Refer drawing CA01-1-4 for typical details of adjustable pipe support stands. The designer shall input pipe support stand height 'H' together with radii 'R1' and 'R2' in the Material List.*

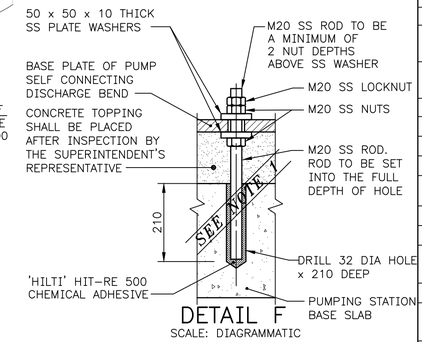

DETAIL F

SCALE: DIAGRAMMATIC

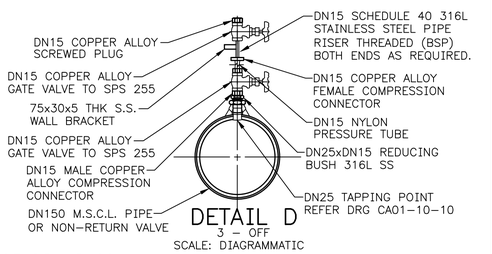

DETAIL D

3 - OFF

SCALE: DIAGRAMMATIC

DETAIL E

REFERENCE DRAWINGS

TYPE 10, 40 & 90 PUMPING STATIONS - GENERAL COMMON SPECIFICATION NOTES	CA01-1-3
TYPE 10, 40, 90 AND 180 PUMPING STATIONS AND VALVE PITS - PIPE SUPPORT STAND, VALVE SPINDLE EXTENSION & GUIDE DETAILS	CA01-1-4
SITE PLAN (TYPE 40 EXAMPLE)	CA01-3-1
STRUCTURAL DETAILS - PRECAST COMPONENTS	CA01-10-5
PRECAST SLABS & COVERS	CA01-10-6-1 TO 6-4
ELECTRICAL SLAB DETAILS	CA01-10-7
VALVE, CONTROL AND ALARM HOLE COVERS	CA01-10-9
MISC. STEEL FABRICATION DETAILS	CA01-10-10
PUMP GUIDE RAIL SUPPORT, LIFTING CHAIN HOOK AND LIFTING CHAIN DETAILS - WET WELL	CA01-10-11
VALVE PIT DRAIN, INLET PIPE & LANYARD DETAILS	CA01-10-12
GRATING ARRANGEMENT	CA01-10-14
GRATING DETAILS	CA01-10-15
GUARDRAIL DETAILS	CA01-10-16
GUARDRAIL DETAILS	CA01-10-17
GUIDE RAILS ALTERNATIVE ARRANGEMENT	CA01-10-18
TYPE 10 AND TYPE 40 PS - MOBILE PUMP CONNECTION & AIR RELEASE POINTS	CA01-56-1
MAGNETIC FLOW METER INSTALLATION - DEEP ARRANGEMENT	CA01-57-2
RPZ BACKFLOW PREVENTION DEVICE	CA01-70-1

'Input' Indicates Information Required From The Design Engineer

MARK	DESCRIPTION	MAT.	NO.OFF	REMARKS
34	DN150 FLANGED PIPE x 1400 LONG	DI	1	CA01-1-3
33	DN150 FLANGED PIPE x 200 LONG	MSCL	2	
32	DN'Input'x DN'Input'FLYGT DISCHARGE BEND	DI	2	TO SPS 503
31	DN'Input'CLAW ADAPTOR	DI	2	WHEN REQUIRED
30	DN150 FLANGE TO PLAIN END PIPE	MSCL	1	CA01-10-10
29	DN150 FLANGE TO PLAIN END PIPE	MSCL	1	CA01-10-10
28	DN150 MAGNETIC FLOW METER		1	
27	PUMP GUIDE RAIL SUPPORT BRACKET (2 per support)	SS	'Input'	
26	PUMP GUIDE RAIL SUPPORT BEAM	SS	'Input'	CA01-10-11
25	DN150 SLIP ON FLANGE	MS	6	CA01-10-10
24	DN 'Input' STRAIGHT COUPLING x 2 RUBBER RING SOCKETS	PVC	1	
23	DN 'Input' INLET PIPE	SS	1	CA01-10-12
22	CONTROL HOLE COVER (ø200 HOLE)	SS	1	CA01-10-9
21	DN 'Input' SS FLANGED KNIFE-GATE VALVE WITH SS SPINDLE EXTENSION AND GUIDE BRACKETS	SS	1	TO SPS 259 (VALVE) CA01-1-4 (BRACKETS)
20	PUMP POWER CABLE LANYARD ASSEMBLY	SS	2	CA01-10-12
19	DN150 UNI-FLANGE ASSEMBLY	DI	3	CA01-1-3
18	ELECTRICAL SWITCHBOARD		1	REFER ELECTRICAL DRAWINGS
17	DN150xDN100 FLANGED SCOUR TEE (INVERTED)	DI	1	CA01-1-3
16	DN 'Input' TEE	SS	1	CA01-10-12
15	VALVE & ALARM HOLE COVERS (ø150 HOLE)	SS	2	CA01-10-9
14	PIPE SUPPORT STAND 'Input' HEIGHT 'H', RADII 'Input' 'R1' & 'Input' 'R2' (SEE ADDITIONAL NOTE 6)	MS	4	CA01-1-4
13	DN25 TAPPING POINT		3	CA01-10-10
12	LIFTING CHAIN HOOK	SS	2	CA01-10-11
11	DN150 x DN 'Input' FLANGE-SOCKET TAPER	DI	1	CA01-1-3
10	DN150 x DN100 FLANGED ECCENTRIC REDUCER	DI	2	REFER NOTE 2 & CA01-1-3
9	DN150 x DN150 FLANGED TEE	DI	1	CA01-1-3
8	DN150 FLANGE TO PLAIN END PIPE	MSCL	1	CA01-10-10
7	DN150 FLANGE TO PLAIN END PIPE	MSCL	1	CA01-10-10
6	DN150 FLANGE TO PLAIN END PIPE	MSCL	1	CA01-10-10
5	DN150 GATE VALVE	CI	2	TO SPS 272
4	DN150 SWING CHECK NRV WITH RESILIENT SEATED DISC	CI	2	TO SPS 223
3	DN150 FLANGE TO PLAIN END PIPE	MSCL	2	CA01-10-10
2	DN150 x 90° FLANGED BEND	DI	3	CA01-1-3
1	DN150 FLANGE TO PLAIN END PIPE	MSCL	2	CA01-10-10

MATERIAL LIST

THIS DRAWING IS DERIVED FROM CA01-10-2L

ISSUE	DATE	GRID	REVISION	DRN	REC	APPD
L	04/2022		PUMP NOTE 2 AMENDED. MATERIAL LIST ITEM 14 AMENDED.	ME	LT	KP
K	05/2019		AMEND MATERIAL LIST, ANCHORS, PUMP STATION BASE SEGMENT DETAILS & MAG FLOW DETAILS	VF	LT	KP
J	06/2018		ACCESS ROAD, ELECTRICAL SLAB, ALARM/CONTROL LEVELS & GENERAL REVISION	FR	LL	KP
I	02/2017		REFERENCE DRAWING TITLES AND MATERIAL LIST AMENDED	BJ	ML	KP
H	03/2016		REFERENCE DRAWING CA01-1-4, ADDITIONAL NOTE 7 & SPINDLE BRACKET IN VALVE PIT ADDED. MARK 14, 21 & 26 WALLS REVISED	FR	KR	DVDN

SURVEY BOOKS

VERTICAL DATUM AHD	DES CALC J.C.B.	NORTH POINT
COORDINATE SYS NONE	DES CHD N/A	
DES REF N/A	DRN K.B.	
	Q.C. CHD P.R.M.	

'Input' Designers Identification Label

RECOMMENDED 27/05/1997
J.C. BOND (SIGNED)
SUPERVISING ENGINEER

APPROVED 27/05/1997
E.J. MURPHY (SIGNED)
MANAGER I.D. BRANCH

WATER CORPORATION

WASTEWATER - EXAMPLE DRAWING
WASTEWATER PUMPING STATIONS AND PRESSURE MAINS
TYPE 40 PUMPING STATION - WITH VALVE PIT
GENERAL ARRANGEMENT - DN150 PIPEWORK

ORIGINAL SHEET SIZE A1

FILE 'Input' | PLAN CA01-10-2 | CAD | ISSUE L
PROJECT 'Input' | MF

© THIS DRAWING IS THE PROPERTY OF THE WATER CORPORATION. IT SHALL NOT BE COPIED WITHOUT PERMISSION.

CAD MANAGEMENT_NOT READ ONLY\WWCS\STANDARD DRAWINGS\PUMP STATIONS\CAD\CA01 - 2022\CA01-010-002-01L 08:03 08/09/2022 MIRCOPO/NB41268

566
810