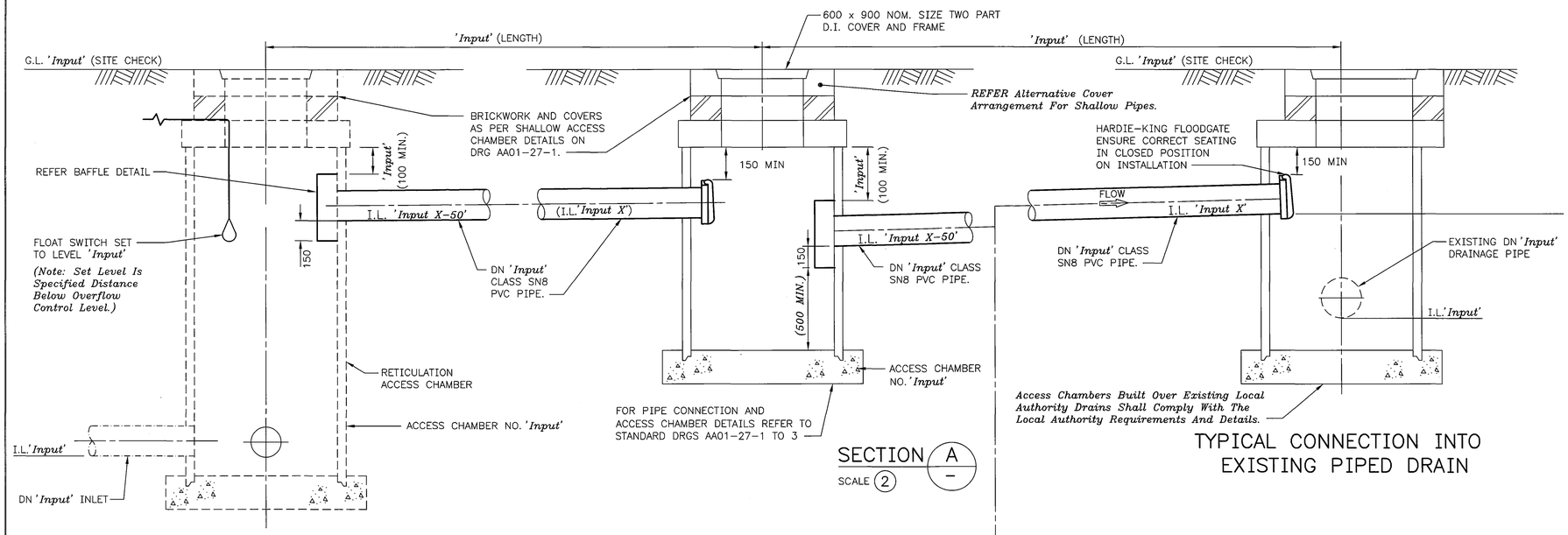


SECTION A
SCALE 2

TYPICAL CONNECTION INTO EXISTING PIPED DRAIN

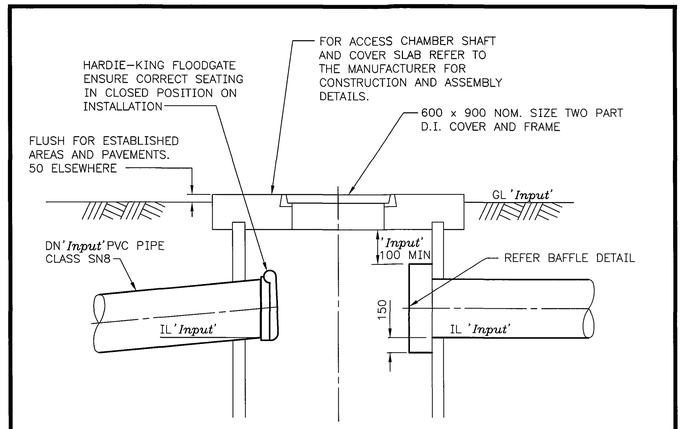


ALTERNATIVE ACCESS CHAMBER COVER ARRANGEMENT.
*Design Engineer to select as appropriate for the available pipe cover.*
SCALE 2

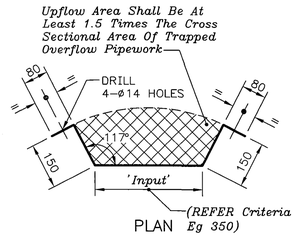


PLAN

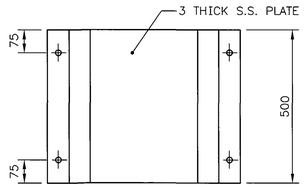


ELEVATION
BAFFLE DETAIL
2-OFF
SCALE 3

*Delete Non Applicable Items*

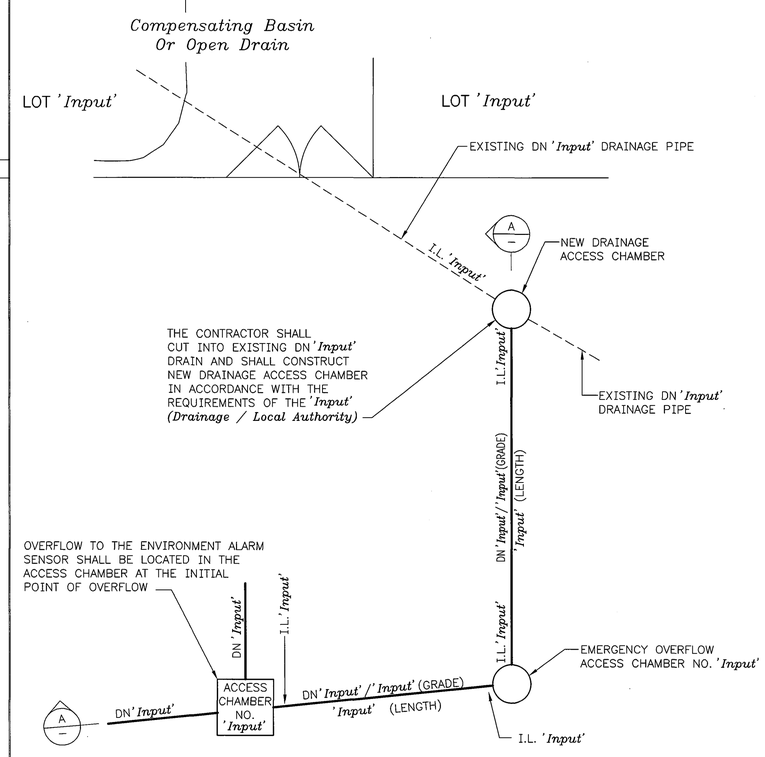


EMERGENCY OVERFLOW DISCHARGE ROUTE PLAN
*(Typical – Design Engineer To Modify As Required)*
SCALE 1

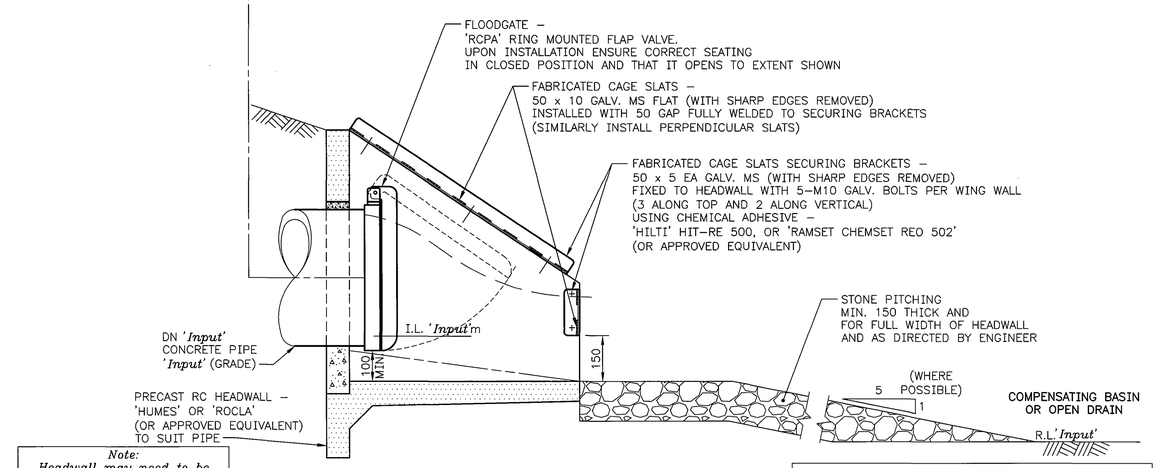


*Note: Headwall may need to be larger than required to fit fabricated cage (e.g. DN375 conc. pipe but using DN525 suited headwall)*

TYPICAL CONNECTION INTO COMPENSATING BASIN OR OPEN DRAIN
*(To Suit The Requirements Of The Drainage, Local And Environmental Authorities)*
SCALE 3

*Compensating Basin Or Open/Pipe Drain (Design Engineer Shall Specify And Show Discharge Area Protection Work As Required). In Undeveloped Areas, Stone Pitching Shall Be Extended Around Headwall to Prevent Erosion.*

FOR COMMON SPECIFICATION NOTES REFER DRAWING CA01-1-3

GENERAL NOTES
1. STAINLESS STEEL BAFFLES SHALL BE GRADE 316L.
2. SS BAFFLES SHALL BE FIXED TO CONCRETE WALLS WITH M12 SS GRADE 316 MASONRY ANCHORS.
3. PVC PIPE SHALL BE SN8 TO AS/NZS 1260.

REFERENCE DRAWINGS

| | |
|---|---|
| COMMON SPECIFICATION NOTES | CA01-1-3 |
| SITE PLAN (TYPE 40 EXAMPLE) | CA01-3-1 |
| EMERGENCY STORAGE TANK DETAILS | CA01-5-1 |

3 100 50 0 100 200 300 400 500 600 700 mm (1:10 AT A1)
2 500 0 500 1000 mm (1:20 AT A1)
1 10.5 0 1 2 3 4 5 6 7 m (1:100 AT A1)

*'Input' Indicates Information Required From Design Engineer*

THIS DRAWING IS DERIVED FROM CA01-5-3G

| ISSUE | DATE | GRID | REVISION | DRN | REC | APPD |
|---|---|---|---|---|---|---|
| G | 05/2019 | | AMEND GENERAL NOTES, REFERENCE DRAWINGS & REMOVE REFERENCE TO WASTEWATER MANUAL & CI | VF | lt | KP |
| F | 06/2018 | | COMPENSATING BASIN OR OPEN DRAIN EROSION PROTECTION INFORMATION REVISED | FR | LL | KP |
| E | 11/2015 | | COMPENSATING BASIN OR OPEN DRAIN REVISED | FR | DVN | DM |
| D | 09/2013 | | LADDERS REMOVED | KLM | ML | DM |
| C | 04/2010 | | OVERFLOW TO THE ENVIRONMENT NOTE CHANGED, FLOAT SWITCH | KLM | RN | SK |

566
810

DESIGN SURVEY NONE
ASCON SURVEY NONE
VERTICAL DATUM AHD
COORDINATE SYS NONE
DES REF N/A
DES CALC J.C.B.
DES CHD N/A
DRN K.B.
Q.C. CHD P.R.M.
NORTH POINT 'Input'
'Input' Designers Identification Label
RECOMMENDED 27/05/1997 J.C. BOND (SIGNED) SUPERVISING ENGINEER
APPROVED 27/05/1997 E.J. MURPHY (SIGNED) MANAGER I.D. BRANCH

WATER CORPORATION

WASTEWATER – EXAMPLE DRAWING
WASTEWATER PUMPING STATIONS AND PRESSURE MAINS
TYPE 40 PUMPING STATIONS AND SMALLER
EMERGENCY OVERFLOW DETAILS

FILE 'Input' | PLAN CA01-5-3 | CAD | ISSUE G
PROJECT 'Input'
ORIGINAL SHEET SIZE A1
MF 26 JUN 2019

© THIS DRAWING IS THE PROPERTY OF THE WATER CORPORATION. IT SHALL NOT BE COPIED WITHOUT PERMISSION.

CAD MANAGEMENT_NOT READ ONLY\WWCS\STANDARD DRAWINGS\PUMP STATIONS\CAD\CA01\REVISIONS\COMPLETE\CA01-005-003-01G 13:44 20/06/2019 farrelv1/WS23088