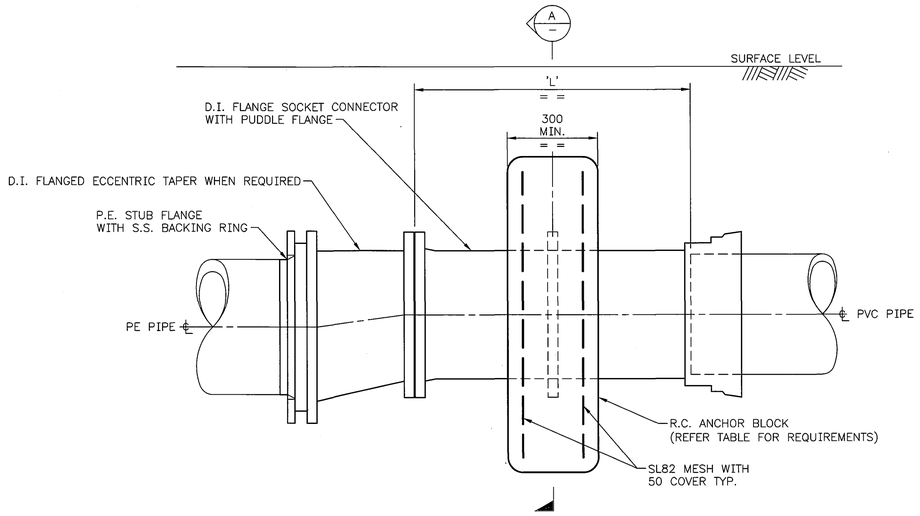

ELEVATION

TYPICAL ARRANGEMENT – SINGLE ANCHOR BLOCK

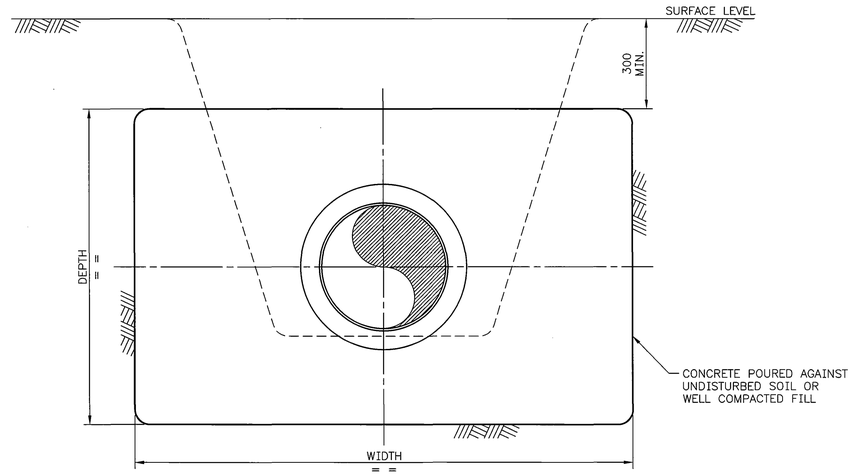

SECTION A

SYSTEM PRESSURE RATING PN12						
PE TO PVC CONNECTION				ANCHOR BLOCK		
PE PIPE NOM. DIA.	D.I. TAPER NOM. DIA.	PVC PIPE NOM. DIA.	DI FITTING LENGTH 'L' (APPROX.)	WIDTH	DEPTH	NUMBER OF BLOCKS
DN125	NOT REQUIRED	DN100	600	550	400	1
DN180	NOT REQUIRED	DN150	600	700	600	1
DN250	DN250 – DN200	DN200	915	950	850	1
DN315	DN300 – DN250	DN250	915	1450	900	1
DN355	DN350 – DN300	DN300	915	900	900	2
DN450	DN450 – DN375	DN375	915	1250	1050	2

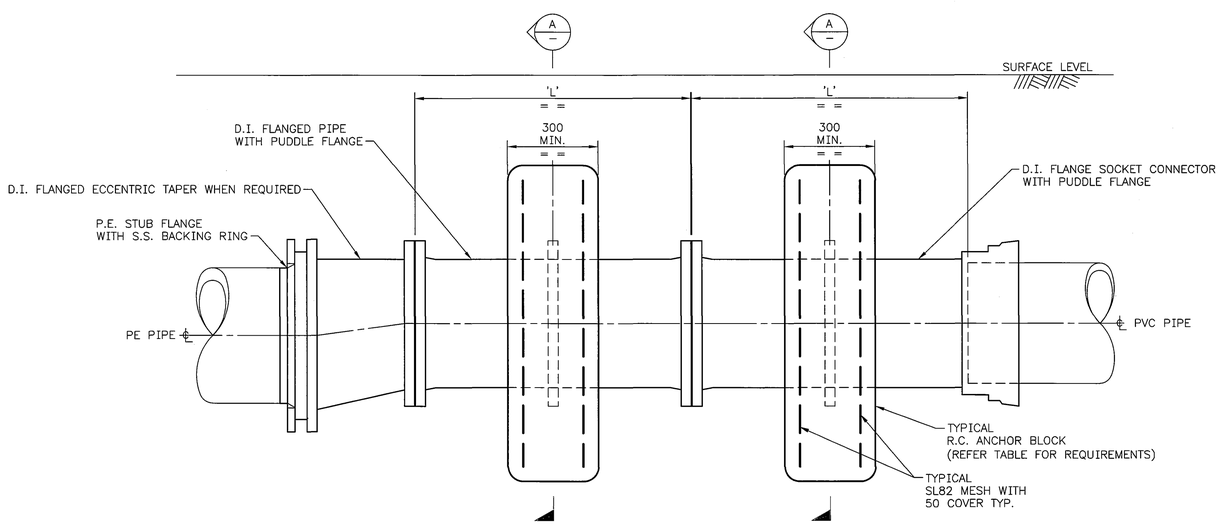

ELEVATION

TYPICAL ARRANGEMENT – TWO ANCHOR BLOCKS

SYSTEM PRESSURE RATING PN16						
PE TO PVC CONNECTION				ANCHOR BLOCK		
PE PIPE NOM. DIA.	D.I. TAPER NOM. DIA.	PVC PIPE NOM. DIA.	DI FITTING LENGTH 'L' (APPROX.)	WIDTH	DEPTH	NUMBER OF BLOCKS
DN125	NOT REQUIRED	DN100	600	550	500	1
DN180	NOT REQUIRED	DN150	600	750	750	1
DN250	DN250 – DN200	DN200	915	1250	850	1
DN315	DN300 – DN250	DN250	915	900	900	2
DN355	DN350 – DN300	DN300	915	1100	950	2
DN450	DN450 – DN375	DN375	915	1650	1050	2

FOR COMMON SPECIFICATION NOTES
REFER DRAWING CA01–1–3

NOTES:

1. PE PIPE AND FITTINGS SHALL BE IN ACCORDANCE WITH SPS 125.
2. PE STUB FLANGE BACKING RINGS SHALL BE 316 SS, DRILLED IN ACCORDANCE WITH AS/NZS 4087 FIGURE B7.
3. DUCTILE IRON (D.I.) FITTINGS INCLUDING SPECIAL CONNECTOR PIPE FITTINGS SHALL BE IN ACCORDANCE WITH SPS 106.
4. D.I. FLANGE DRILLING SHALL BE IN ACCORDANCE WTIH AS/NZS 4087 FIGURE B5.
5. FLANGE GASKETS SHALL BE IN ACCORDANCE WITH DS38.02 TABLE 2.5.
6. FLANGE FASTENERS (NUTS, BOLTS AND WASHERS) SHALL BE 316 SS IN ACCORDANCE WITH DS38.02 TABLE 2.6 (THE USE OF HOT DIP GALVANISED FASTENERS SHALL BE SUBJECT TO APPROVAL BY THE CORPORATION ON THE BASIS OF AN ACCEPTABLE PROTECTION SPECIFICATION IN ACCORDANCE WITH DS 95).
7. BEDDING AND FILL MATERIAL BELOW AND AROUND THE CONNECTED PIPELINE SHALL BE COHESIONLESS AND IN ACCORDANCE WITH AS/NZS 2566.2 CLAUSE 5.4.2.2 WITH PARTICLE SIZE NOT EXCEEDING 10mm.
8. FILL MATERIAL SHALL BE COMPACTED IN ACCORDANCE WITH AS/NZS 2566.2 CLAUSE 5.6 TO ACHIEVE A DENSITY INDEX NOT LESS THAN 70%.
9. WHERE THE ANCHOR BLOCK MAY BE CONSTRAINED BY PROXIMITY OF EXISTING SERVICES, BLOCK DIMENSIONS MAY BE VARIED PROVIDED THRUST BEARING AREA IS NOT REDUCED.
10. CONCRETE SHALL BE MINIMUM STRENGTH GRADE N25.
11. FINAL CONNECTION FROM THE PE TO THE PVC CONNECTION PIPE SHALL BE MADE A MINIMUM OF 24 HOURS AFTER THE PE PIPE HAS BEEN LAID AND BEFORE 10:00AM TO ALLOW FOR THERMAL EXPANSION.
12. CONCRETE ANCHOR BLOCKS TO BE POURED AFTER CONNECTION FROM THE PE TO THE PVC PIPE HAS BEEN MADE.
13. REINFORCEMENT SHALL BE DEFORMED RIBBED AND COMPLY WITH AS/NZS 4671 WHERE WELDED MESH IDENTIFIED WITH SL DENOTES SQUARE CONFIGURATION, GRADE 500 MPa OF LOW DUCTILITY.

REFERENCE DRAWINGS

COMMON SPECIFICATION NOTES CA01–1–3

PE to PVC connections close to wastewater pressure main discharge points shall comply with the requirements of DS 51 regarding the use of sulphide resistant materials.

(1:10 AT A1)
100 50 0 100 200 300 400 500 600 700 mm

ISSUE	DATE	GRID	REVISION	DRN	REC	APPD
C	05/2019		INCLUDE REFERENCE TO CA01–1–3.	VF	LL	KP
B	06/2018		DI FITTINGS & NOTES 5 & 6 REVISED ALSO LENGTH OF DI FITTINGS TO TABLES, NOTE 13 & DESIGN ENGINEER INFORMATION ADDED	FR		

DESIGN SURVEY NONE | VERTICAL DATUM NONE | COORDINATE SYS NONE | ASCON SURVEY NONE | DES REF | DES CALC H AITKEN | DES CHD M LAMORTE | DRN B JEFFERS | Q.C. CHD P MIRCO

NORTH POINT

INFRASTRUCTURE DESIGN BRANCH

RECOMMENDED 20/05/2014
H. AITKEN (SIGNED)
SENIOR ENGINEER

APPROVED 21/05/2014
D. MCADIE (SIGNED)
PRINCIPAL ENGINEER

WATER CORPORATION

WATER CORPORATION – WASTEWATER PIPELINES
STANDARD AND EXAMPLE DRAWINGS
PE PIPE TO PVC PIPE CONNECTION
PE PIPE SIZES DN125 TO DN450

FILE | PROJECT | PLAN LJ01–2–1 | CAD | ISSUE C

ORIGINAL SHEET SIZE A1

MF 26 JUN 2019

566
810

© THIS DRAWING IS THE PROPERTY OF THE WATER CORPORATION. IT SHALL NOT BE COPIED WITHOUT PERMISSION.

CAD MANAGEMENT_NOT READ ONLY\WWCS\STANDARD DRAWINGS\PUMP STATIONS\CAD\CA01\REVISIONS\COMPLETE\LJ01-002-001-01C 14:35 19/06/2019 farrelv1/WS23088