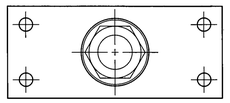

PLAN
(PIPE SUPPORT CRADLE NOT SHOWN)
SCALE (1)

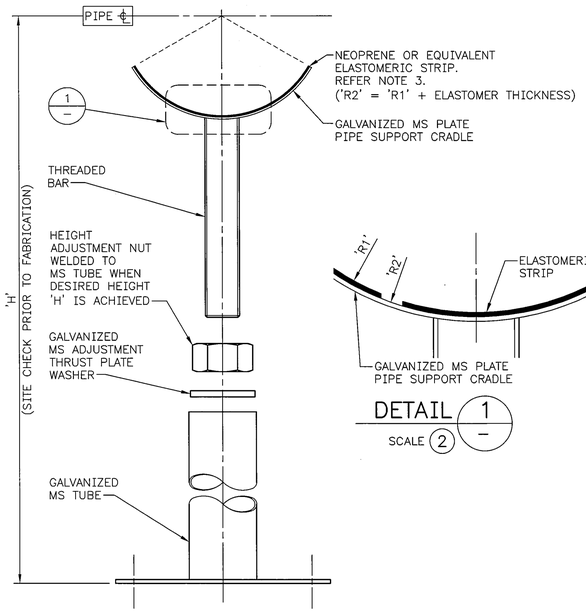

ELEVATION
ADJUSTABLE PIPE SUPPORT STAND
(PROPRIETARY ITEM – REFER NOTES)
SCALE (1)

DETAIL (1)
SCALE (2)

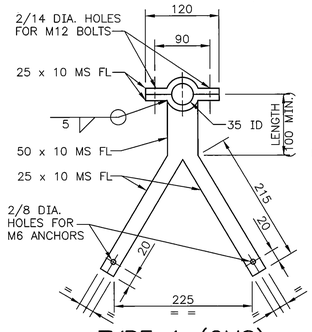

TYPE 1 (GMS)
FOR CASTING INTO BRICKWORK

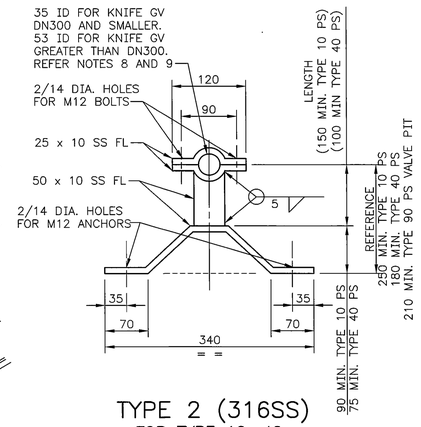

TYPE 2 (316SS)
FOR TYPE 10, 40,
PUMPING STATION INLET VALVE
AND TYPE 90
PUMPING STATION VALVE PIT

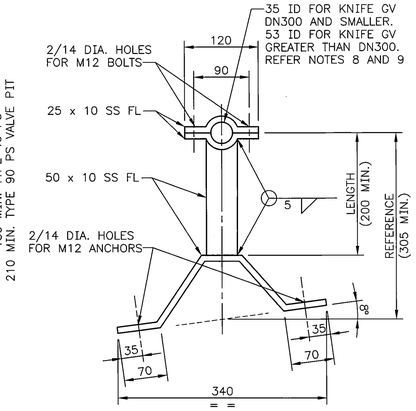

TYPE 3 (316SS)
FOR TYPE 90
PUMPING STATION INLET KNIFE–GATE VALVE

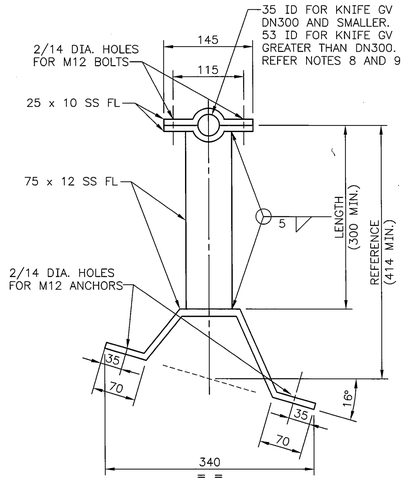

TYPE 4 (316SS)
FOR TYPE 180
PUMPING STATION INLET KNIFE–GATE VALVE

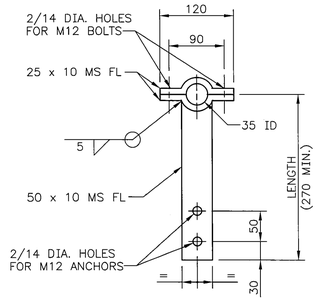

TYPE 5 (GMS)
FOR TYPE 180
PUMPING STATION VALVE PIT

PLANS
VALVE SPINDLE GUIDE BRACKETS
(SITE CHECK LENGTH OF BRACKET PRIOR TO FABRICATION)
SCALE (1)

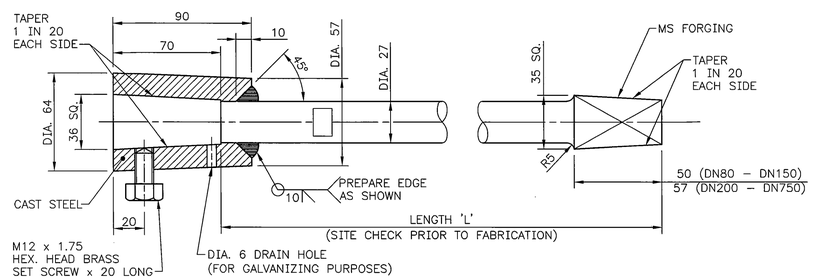

VALVE SPINDLE EXTENSION
(GMS ONLY)
(REFER NOTE 8)
SCALE (2)

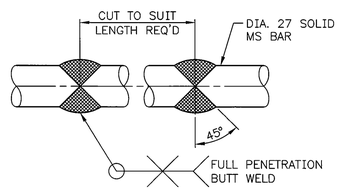

SPINDLE LENGTH
ADJUSTMENT PROCEDURE
(GMS ONLY)
SCALE (2)

FOR COMMON SPECIFICATION NOTES
REFER DRAWING CA01–1–3

ADDITIONAL NOTES:

1. PIPE SUPPORT STAND AND SPINDLE GUIDE CONFIGURATION AND ASSEMBLY SHALL BE SHOWN ON GENERAL ARRANGEMENT DRAWINGS.
2. THE DESIGNER SHALL NOMINATE THE REQUIRED LENGTH OF GATE VALVE SPINDLE EXTENSIONS, SPINDLE GUIDE BRACKETS AND PIPE SUPPORT STAND DIMENSIONS 'R2' AND 'H' ON THE PROJECT GENERAL ARRANGEMENT DRAWINGS.
3. ELASTOMERIC PIPE SUPPORT MEMBRANE SHALL BE AT LEAST 3mm THICK AND SHALL COMPLY WITH AS 1646 AND AS 681 FOR A HARDNESS OF 60 ± 5 IRHD.
4. TYPE 1 VALVE SPINDLE GUIDE BRACKETS SHALL BE FIXED WITH M6 STAINLESS STEEL 'HILTI' SCREW ANCHORS.
5. ADJUSTABLE PIPE SUPPORT STAND AND VALVE SPINDLE GUIDE BRACKETS SHALL BE FIXED TO CONCRETE WITH M12 STAINLESS STEEL 'HILTI' DROP–IN ANCHORS.
6. ADJUSTABLE PIPE SUPPORT STANDS ARE AVAILABLE FROM; 'SWIFT METAL SERVICES' TEL: 1800 626 525 AND THE 'BINDER GROUP' TEL: (08) 9353 2208.
7. ONLY PROPRIETARY PRODUCTS AUTHORISED BY THE WATER CORPORATION SHALL BE USED.
8. GATE AND KNIFE GATE VALVE SPINDLE EXTENSIONS SHALL BE GALVANIZED MILD STEEL (GMS) (SOLID MS TO AS/NZS 3679.1–250) OR BETTER FOR VALVE PITS NOT DIRECTLY INTERCONNECTED WITH PUMPING STATION WET WELLS.
9. VALVE SPINDLE EXTENSIONS AND GUIDE BRACKETS SHALL BE 316L SS FOR ALL PUMPING STATION WET WELL APPLICATIONS AND SHALL:
   9.1 BE 32mm DIA. 316L SS SCHEDULE 10S TUBING FOR VALVES DN300 AND SMALLER
   9.2 BE 50mm DIA. 316L SS SCHEDULE 40S TUBING FOR VALVES GREATER THAN DN300
   9.3 HAVE 316L SS VALVE CAPS AND KEYS IN ACCORDANCE WITH AS 2638.

REFERENCE DRAWING:
TYPE 10, 40 & 90 PUMPING STATIONS – COMMON SPECIFICATION NOTES – SHEET 1 OF 2 — CA01–1–3

TABLE 1: MINIMUM SUPPORT STAND DIMENSIONS

NOMINAL PIPE SIZE	'R1'/'R2' MINIMUM VALUES (mm) (REFER NOTE B BELOW)				THREADED ROD MINIMUM SIZE	SUPPORT MS TUBE MINIMUM OD
	MS/SS	DI	PE (NOTE A)	GRP		
100	57/61	62/65	64/67 (DN125)	–	M24	40
150	84/87	90/93	91/94 (DN180)	–	M48	85
200	111/114	117/120	NON–PREFERRED	–	M48	85
250	138/141	144/147	159/162 (DN315)	–	M48	85
300	163/166	174/177	179/182 (DN355)	174/177	M56	110
375/400	204/207	215/218	226/229 (DN450)	215/218	M56	110
450	–	255/258	281/284 (DN560)	255/258	M89	150
600	306/309	335/338	316/319 (DN630)	335/338	M102	150
750	–	415/418	–	–	M102	150

A THE SELECTION AND USE OF PE PIPE COMPONENTS FOR USE WITHIN VALVE (AND SIMILAR ACCESS PITS) SHALL BE SUBJECT TO JUSTIFICATION OF DESIGN ADEQUACY IN TERMS OF PE PIPELINE STRUCTURAL SUPPORT AND THE STRUCTURAL CAPACITY OF PIT AND PIPELINE TO CONSTRAIN PIPELINE AXIAL AND DIAMETRAL MOVEMENT WITHOUT LOSS OF INTEGRITY.
B PROVIDES FOR +1mm TOLERANCE AND 3mm OF ELASTOMER THICKNESS.

The details shown on this drawing are standard requirements for various types of Pumping Stations (ie Type 10, 40, 90 and 180) and associated valve pits. The Design Engineer shall not alter individual standard details but may, for clarity, delete individual details that are not relevant to a particular Pumping Station project.

'Input' Indicates Information Required From Design Engineer

(2) 50 40 30 20 10 0 50 100 mm (1:2 AT A1)
(1) 100 50 0 100 200 300 mm (1:5 AT A1)

THIS DRAWING IS DERIVED FROM CA01–1–4C

ISSUE	DATE	GRID	REVISION	DRN	REC	APPD
C	05/2019		UPDATED BOLTS TO ANCHORS & AMENDED NOTES	VF	KR	KP
B	06/2018		TYPE 1 BRACKET, ADDITIONAL NOTES (WITH RELATED REFERENCES) & VALVE SPINDLE EXTENSION (FOR SIZE OF SQ SOCKET FROM 35 TO 36) REVISED	FR	KR	KP

DESIGN SURVEY NONE | VERTICAL DATUM NONE | COORDINATE SYS NONE | ASCON SURVEY NONE | DES REF NONE
DES CALC K. RODDY | DES CHD N/A | DRN F. RACCUIA | Q.C. CHD P. MIRCO
NORTH POINT
'Input' Designers Identification Label
RECOMMENDED 16/03/2016 K. RODDY (Signed) SENIOR ENGINEER, WWCS
APPROVED 16/03/2016 D V D NEST (Signed) PRINCIPAL ENGINEER, WWCS

WATER CORPORATION

WASTEWATER – EXAMPLE DRAWING
WASTEWATER PUMPING STATIONS AND PRESSURE MAINS
TYPE 10, 40, 90 AND 180 PUMPING STATIONS AND VALVE PITS
PIPE SUPPORT STAND, VALVE SPINDLE EXTENSION & GUIDE DETAILS

FILE 'Input' | PROJECT 'Input' | PLAN CA01–1–4 | CAD | ISSUE C | ORIGINAL SHEET SIZE A1 | MF 26 JUN 2019

566
810

© THIS DRAWING IS THE PROPERTY OF THE WATER CORPORATION. IT SHALL NOT BE COPIED WITHOUT PERMISSION.

CAD MANAGEMENT_NOT READ ONLY\WWCS\STANDARD DRAWINGS\PUMP STATIONS\CAD\CA01\REVISIONS\COMPLETE\CA01–001–004–01C 09:51 20/06/2019 farrelv1/WS23088