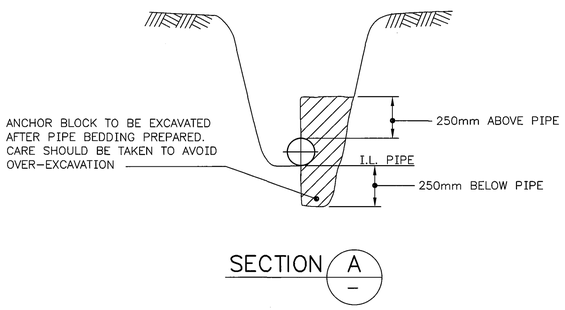

TYPE	A	B	C	D	E
MIN. WIDTH	600	750	1500	2000	2250
DIM 'X'	150	150	200	200	200

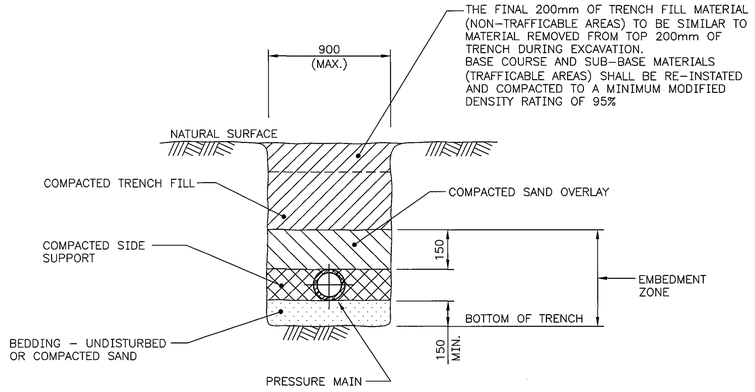

EMBEDMENT & TRENCH FILL DETAIL DRY CONDITIONS

TYPICAL SECTION

Design Engineer To Modify As Required For Pipe Type And Depth.

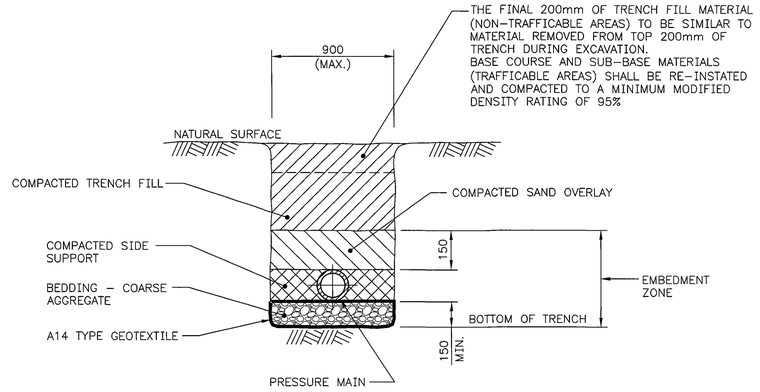

EMBEDMENT & TRENCH FILL DETAIL WET CONDITIONS

TYPICAL SECTION

Design Engineer To Modify As Required For Pipe Type And Depth.

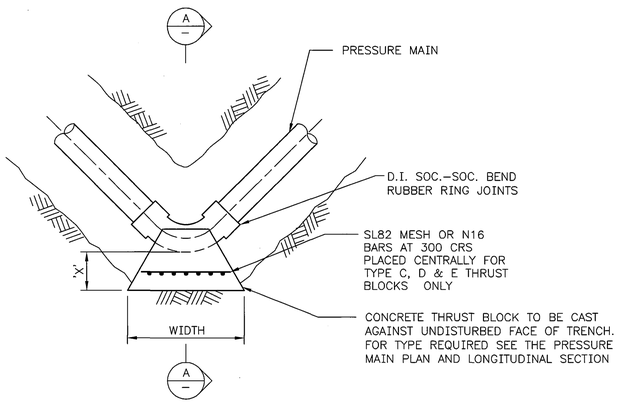

TYPICAL THRUST BLOCK DETAIL

Thrust Block Type Shall Be Selected And Shown On Longitudinal Section Drawings By Design Engineer.

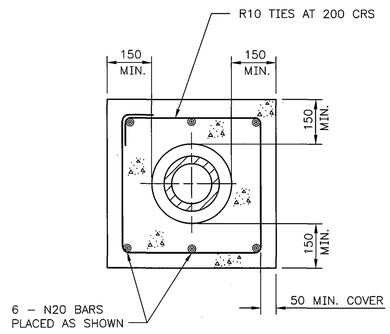

TYPICAL CONCRETE ENCASEMENT DETAIL

FOR COMMON SPECIFICATION NOTES REFER DRAWING CA01-1-3

GENERAL NOTES:

1. THIS DRAWING HAS BEEN PREPARED FOR GENERAL USE AND MAY CONTAIN INFORMATION NOT PERTINENT TO THE WORKS. THE TYPICAL CONSTRUCTION DETAILS SHOWN SHALL APPLY WHEREVER NOMINATED ON THE PRESSURE MAIN PLAN AND LONGITUDINAL SECTION DRAWING
2. CONCRETE SHALL BE GRADE N25.
3. PVC PRESSURE MAIN INSTALLATION WORK SHALL COMPLY WITH AS 2032.
4. EMBEDMENT AND TRENCH FILL WORK:
   a. DRY TRENCH CONDITIONS:
      EMBEDMENT SHALL BE UNDISTURBED NATURAL SAND OR COMPACTED NATURAL SAND FREE FROM ROCK OR OTHER HARD OR SHARP OBJECTS, SHALL NOT CONTAIN PARTICLES LARGER THAN 7mm AND SHALL NOT CONTAIN MORE THAN 12% FINES BY WEIGHT.
   b. WET TRENCH CONDITIONS:
      BEDDING SHALL BE 14mm NOMINAL SIZE COARSE AGGREGATE UNIFORMLY GRADED TO AS 2758.1 AND SHALL APPLY WHEN TRENCH BOTTOM IS STABLE BUT NOT FREE FROM STANDING OR RUNNING WATER. AGGREGATE BEDDING SHALL BE WRAPPED IN A14 TYPE GEOTEXTILE FABRIC WITH 500mm OVERLAP OF THE EDGES OF THE GEOTEXTILE. SIDE SUPPORT AND OVERLAY MATERIALS SHALL BE THE SAME AS 5.a
   c. TRENCH FILL MATERIAL SHALL BE AS SPECIFIED IN THE SPECIFICATION.
5. COMPACTION:
   a. PIPE EMBEDMENT MATERIALS SHALL BE COMPACTED TO A DENSITY RATIO OF NOT LESS THAN 92% OF MAXIMUM MODIFIED DRY DENSITY AS DETERMINED BY AS 1289.5.2.1, AS 1289.5.8.1 AND AS 1289.5.4.1.
   b. TRENCH FILL (TRAFFICABLE AREAS) SHALL BE PLACED IN LOOSE LAYERS NOT EXCEEDING 250mm THICKNESS AND SHALL BE COMPACTED TO A DENSITY RATIO OF NOT LESS THAN 95% OF MAXIMUM MODIFIED DRY DENSITY AS DETERMINED BY AS 1289.5.2.1, AS 1289.5.8.1 AND AS 1289.5.4.1.
   c. TRENCH FILL (NON TRAFFICABLE AREAS) SHALL BE PLACED IN LOOSE LAYERS NOT EXCEEDING 300mm THICKNESS FOR CLAY/COHESIVE MATERIALS OR 400mm LOOSE THICKNESS FOR SAND/GRAVEL/COHESIONLESS MATERIAL AND SHALL BE COMPACTED TO A MINIMUM DENSITY RATIO OF 92% OF MAXIMUM DRY DENSITY AS DETERMINED BY AS 1289.5.2.1, AS 1289.5.8.1 AND AS 1289.5.4.1.

REFERENCE DRAWINGS

COMMON SPECIFICATION NOTES	CA01-1-3
PLANS AND LONGITUDINAL SECTIONS	*'Input'*

'Input' Indicates Information Required From Design Engineer

THIS DRAWING IS DERIVED FROM CA01-60-1D

ISSUE	DATE	GRID	REVISION	DRN	REC	APPD
D	06/2019		AMENDED GENERAL NOTES, REFERENCE DRAWINGS AND REINFORCING DETAILS	VF	lt	KP
C	03/2017		WET & DRY TRENCH FILL DETAILS ADDED, NOTES AMENDED	PAM	ML	KP
B	04/2003		GENERAL REVISION	WS	JCB	EJM

SURVEY BOOKS | VERTICAL DATUM AHD | DES CALC J. LEE | COORDINATE SYS NONE | DES CHD J.C.B. | DES REF N/A | DRN K.B. | Q.C. CHD P.R.M.

NORTH POINT | SCALE : DIAGRAMMATIC

RECOMMENDED 27/05/1997 J.C. BOND (SIGNED)
SUPERVISING ENGINEER
APPROVED 27/05/1997 E.J. MURPHY (SIGNED)
MANAGER I.D. BRANCH

WATER CORPORATION

SEWERAGE - EXAMPLE DRAWING
WASTEWATER PUMPING STATIONS AND PRESSURE MAINS
PRESSURE MAINS - DN375 AND SMALLER
THRUST BLOCK AND TRENCH REFILL DETAILS

FILE *'Input'* | PROJECT *'Input'* | PLAN CA01-60-1 | CAD | ISSUE D | ORIGINAL SHEET SIZE A1 | MF 26 JUN 2019

566
810

© THIS DRAWING IS THE PROPERTY OF THE WATER CORPORATION. IT SHALL NOT BE COPIED WITHOUT PERMISSION.

CAD MANAGEMENT_NOT READ ONLY\WWCS\STANDARD DRAWINGS\PUMP STATIONS\CAD\CA01\REVISIONS\COMPLETE\CA01-060-001-01D 09:57 20/06/2019 farrelv1/WS23088