DocuSign Envelope ID: B61BDA7E-52E7-4622-95EB-A3D80DFA116A

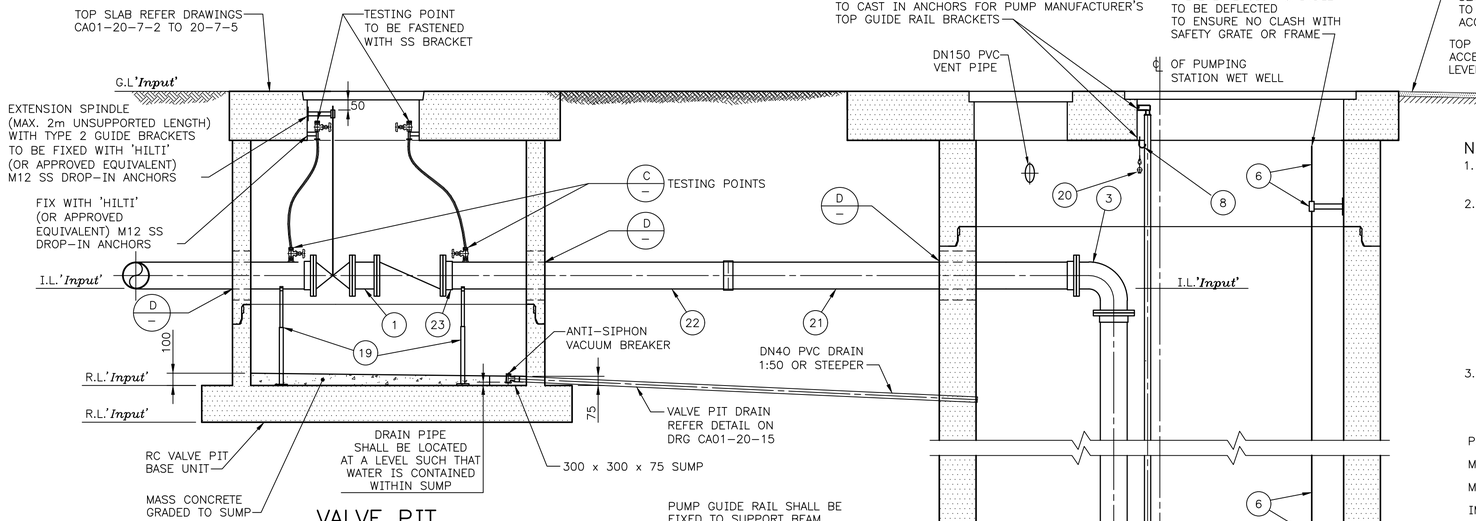

VALVE PIT

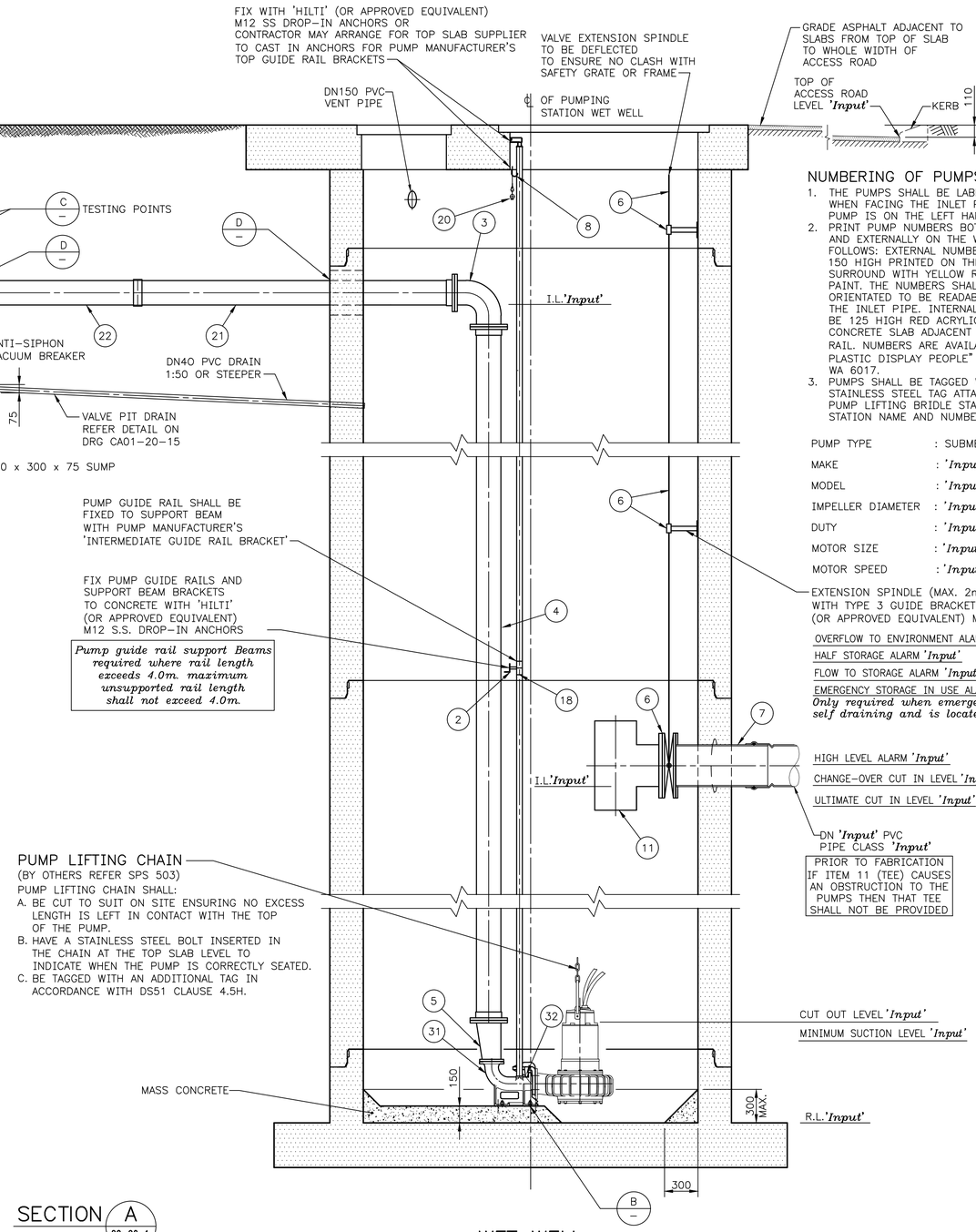

WET WELL

SECTION A 20-20-1

NUMBERING OF PUMPS

1. THE PUMPS SHALL BE LABELLED SUCH THAT WHEN FACING THE INLET PIPE THE NO.1 PUMP IS ON THE LEFT HAND SIDE
2. PRINT PUMP NUMBERS BOTH INTERNALLY AND EXTERNALLY ON THE WET WELL AS FOLLOWS: EXTERNAL NUMBERS SHALL BE 150 HIGH PRINTED ON THE CONCRETE SURROUND WITH YELLOW ROAD MARKING PAINT. THE NUMBERS SHALL BE ORIENTATED TO BE READABLE WHEN FACING THE INLET PIPE. INTERNAL NUMBERS SHALL BE 125 HIGH RED ACRYLIC GLUED TO THE CONCRETE SLAB ADJACENT TO THE SLIDE RAIL. NUMBERS ARE AVAILABLE FROM "THE PLASTIC DISPLAY PEOPLE" OSBORNE PARK, WA 6017.
3. PUMPS SHALL BE TAGGED WITH A STAINLESS STEEL TAG ATTACHED TO THE PUMP LIFTING BRIDLE STATING PUMP STATION NAME AND NUMBER.

PUMP TYPE	: SUBMERSIBLE SEWAGE
MAKE	: 'Input'
MODEL	: 'Input'
IMPELLER DIAMETER	: 'Input'
DUTY	: 'Input' L/s x 'Input' m
MOTOR SIZE	: 'Input' kW
MOTOR SPEED	: 'Input' R.P.M.

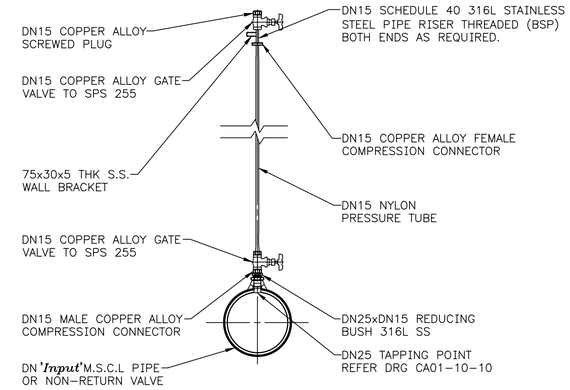

DETAIL C
TESTING POINTS
4 – OFF
SCALE: DIAGRAMMATIC

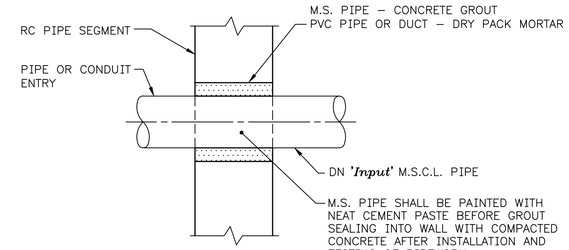

DETAIL D
SCALE: DIAGRAMMATIC

FOR COMMON SPECIFICATION NOTES REFER DRAWING CA01-1-3

ADDITIONAL NOTES

1. *Overflow to environment alarm sensor to be located in the access chamber from which the overflow will occur. If overflow alarm float ball is located >250m from pumping station then a separate remote Scada system is to be installed at location of overflow alarm.*
2. *Pump base plate fixing anchor length and diameter to be in accordance with pump supplier's specification. Design Engineer to determine this requirement and amend drawing if required.*
3. *Refer drawing CA01-1-4 for typical details of adjustable pipe support stands. The designer shall input pipe support stand height 'H' together with radii 'R1' and 'R2' in the Material List drawing CA01-20-20-1.*

REFERENCE DRAWINGS

CA01-1-3	TYPE 10, 40 AND 90 PUMPING STATIONS – COMMON SPECIFICATION NOTES
CA01-1-4	TYPE 10, 40, 90 AND 180 PUMPING STATIONS AND VALVE PITS – PIPE SUPPORT STAND, VALVE SPINDLE EXTENSION & GUIDE DETAILS
CA01-3-2	TYPE 90 PUMPING STATION – SITE PLAN
CA01-5-1	EMERGENCY STORAGE TANK DETAILS
CA01-5-4	EMERGENCY OVERFLOW DETAILS
CA01-5-7	AIR VENT ARRANGEMENT
CA01-20-7-2	VALVE PIT – PRECAST SLAB AND COVERS – STRUCTURAL DETAILS – TEMP. GUARDRAIL SYSTEM
CA01-20-7-3	VALVE PIT – PRECAST SLAB AND COVERS – REINFORCEMENT – TEMP. GUARDRAIL SYSTEM
CA01-20-7-4	VALVE PIT – PRECAST SLAB AND COVERS – STRUCTURAL DETAILS – PERM. GUARDRAIL SYSTEM
CA01-20-7-5	VALVE PIT – PRECAST SLAB AND COVERS – REINFORCEMENT – PERM. GUARDRAIL SYSTEM
CA01-20-8-1	PUMP WELL – TOP SLAB – TEMPORARY GUARDRAIL SYSTEM – ARRANGEMENT
CA01-20-8-2	PUMP WELL – TOP SLAB – TEMPORARY GUARDRAIL SYSTEM – REINFORCEMENT
CA01-20-8-3	PUMP WELL – TOP SLAB – PERMANENT GUARDRAIL SYSTEM – ARRANGEMENT
CA01-20-8-4	PUMP WELL – TOP SLAB – PERMANENT GUARDRAIL SYSTEM – REINFORCEMENT
CA01-20-9	PUMP GUIDE RAIL SUPPORT, LIFTING CHAIN HOOK AND LIFTING CHAIN DETAILS – WET WELL
CA01-20-12	M.S.C.L. PIPE SPECIALS
CA01-20-14	CONTROL AND ALARM HOLE COVERS
CA01-20-15	INLET PIPE, VALVE PIT DRAIN, ULTRASONIC SUPPORT & LANYARD DETAILS
CA01-20-16	ELECTRICAL SLAB DETAILS
CA01-20-18	DN200 BYPASS PUMPING PIPEWORK FOR TYPE 90 PUMPING STATION – TYPICAL BYPASS PIT CONFIGURATION
CA01-20-17	INLET ACCESS CHAMBER DETAILS
CA01-20-19-1	PREVENTION OF FALLS – GRATING ARRANGEMENT
CA01-20-19-2	PREVENTION OF FALLS – GRATING DETAILS
CA01-20-19-3	PREVENTION OF FALLS – TEMPORARY GUARDRAIL SYSTEM – GUARDRAIL DETAILS
CA01-20-19-4	PERMANENT GUARDRAIL SYSTEM – GUARDRAIL DETAILS
CA01-20-20-1	PUMP WELL PRECAST – GENERAL ARRANGEMENT – SHEET 1
CA01-20-21	PUMP WELL AND VALVE PIT PRECAST – STRUCTURAL DETAILS
CA01-70-1	RPZ BACKFLOW PREVENTION DEVICE – ARRANGEMENT AND INSTALLATION DETAILS

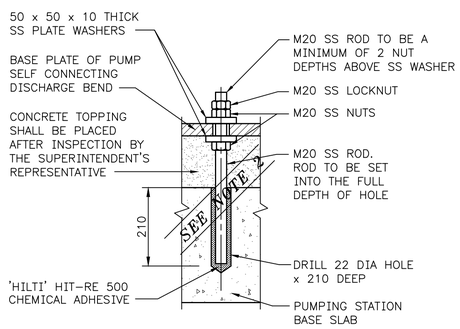

DETAIL B
SCALE: DIAGRAMMATIC

500 0 500 1000 1500 mm
(SCALE 1:25 – A1 SHEET)

'Input' Indicates Information Required From Design Engineer

THIS DRAWING IS DERIVED FROM CA01-20-20-2F

ISSUE	DATE	GRID	REVISION	DRN	REC	APPD
F	06/2023		MARK 21, 22, 23 ADDED, PMP NOTE 2, NOTES & DETAIL B AMENDED	PAM	CP KP	KP
E	05/2019		AMENDED REFERENCE DRAWINGS & ANCHOR DETAILS	VF	LT	KP
D	06/2018		ACCESS ROAD, ALARM/CONTROL LEVELS, WETWELL & VALVE PIT BENCHING & GENERAL REVISION	FR	LL	KP
C	02/2017		MATERIAL LIST AND REFERENCE DRAWING TITLES AMENDED	BJ	ML	KP
B	10/2014		VENT PIPE SIZE AMENDED	BJ	HA	DM

566
810

DESIGN SURVEY NONE	VERTICAL DATUM AHD	DES CALC	NORTH POINT
	COORDINATE SYS NONE	DES CHD	
ASCON SURVEY NONE	DES REF N/A	DRN B. JEFFERS	
		Q.C. CHD P. MIRCO	

'Input'
Designers Identification Label

RECOMMENDED 31/03/2014
M. LAMORTE (SIGNED)
SENIOR ENGINEER, WWCS

APPROVED 31/03/2014
D. MCADIE (SIGNED)
PRINCIPAL ENGINEER, WWCS

WATER CORPORATION

WASTEWATER – EXAMPLE DRAWING
WASTEWATER PUMPING STATIONS AND PRESSURE MAINS
TYPE 90 PUMPING STATION
PUMP WELL PRECAST – GENERAL ARRANGEMENT – SHEET 2 OF 2

ORIGINAL SHEET SIZE A1

FILE 'Input' | PLAN CA01-20-20-2 | CAD | ISSUE F | MF
PROJECT 'Input'

© THIS DRAWING IS THE PROPERTY OF THE WATER CORPORATION. IT SHALL NOT BE COPIED WITHOUT PERMISSION.

CAD MANAGEMENT_NOT READ ONLY\WWCS\STANDARD DRAWINGS\PUMP STATIONS\CAD\CA01 – 2021\FOR DMS\CA01-020-020-02F 11:33 29/06/2023 MCGREGKO/WS31939