DPRPB000175
SCALE 0,200
Item 4

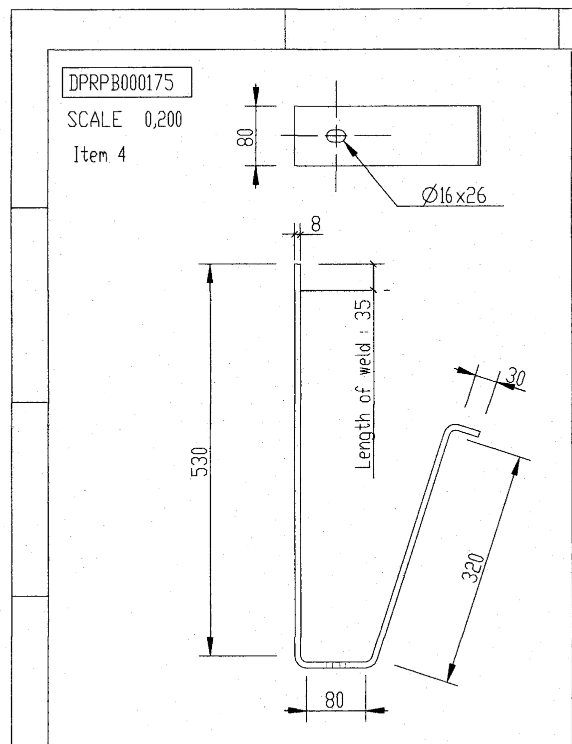

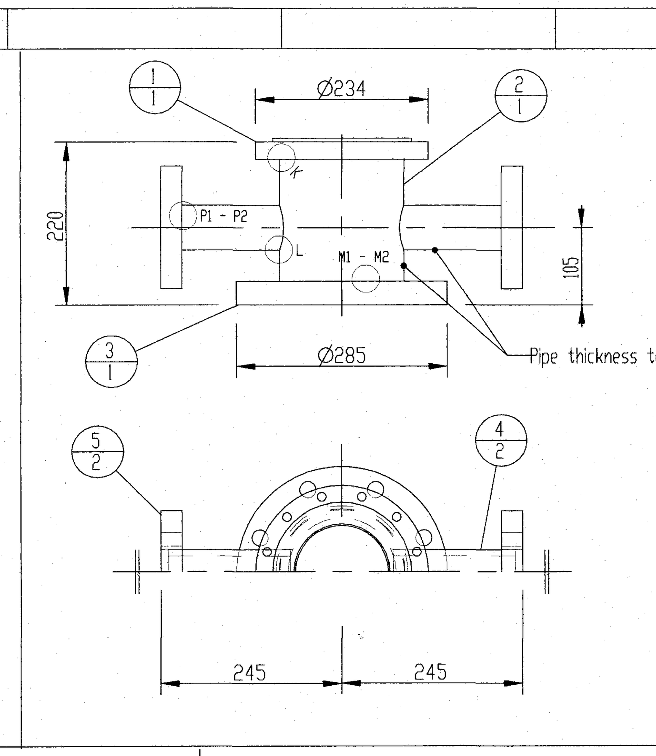

K7004M00001 Item 14
SCALE 0,200

Nominal thickness for Pipe

Rep. Item	Qte Qty	Numero Number	Designation Description	Matiere Material	Observations Remarks
5	2	BDPLS000001	BRIDE PLATE DN50PN16/40 EP29 / FLANGE ND50 NP16/40 TH29	SA-516 GR70	EN1092
4	2	DTYXT000909	TUBE D60.3 EP8.7 L165 / PIPE OD60.3 TH8.7 L165	SA-106 GRB	/
3	1	BDPLS000003	BRIDE PLATE DN150PN16 EP33 / FLANGE	SA-516 GR70	EN1092
2	1	DTYUT001083	TUBE D168.3 EP11 L195 / PIPE OD168.3 TH11 L195	SA-106 GRB	/
1	1	BDRAD000004	BRIDE RACCO.DN150 / CONNECTING FLANGE ND150	SA-516 GR60	/

BDSOD000012 Item 11
COUPE A-A
SCALE 0,400

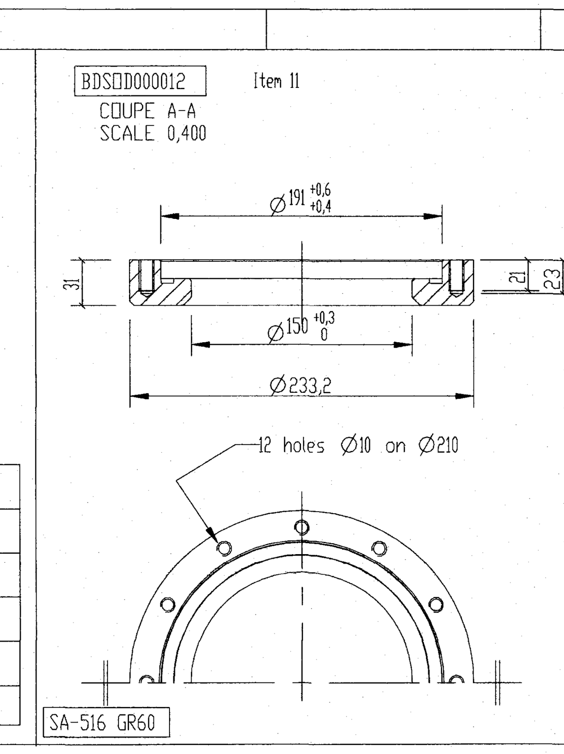

SA-516 GR60

BDVID000016 Item 5
COUPE B-B
SCALE 0,200

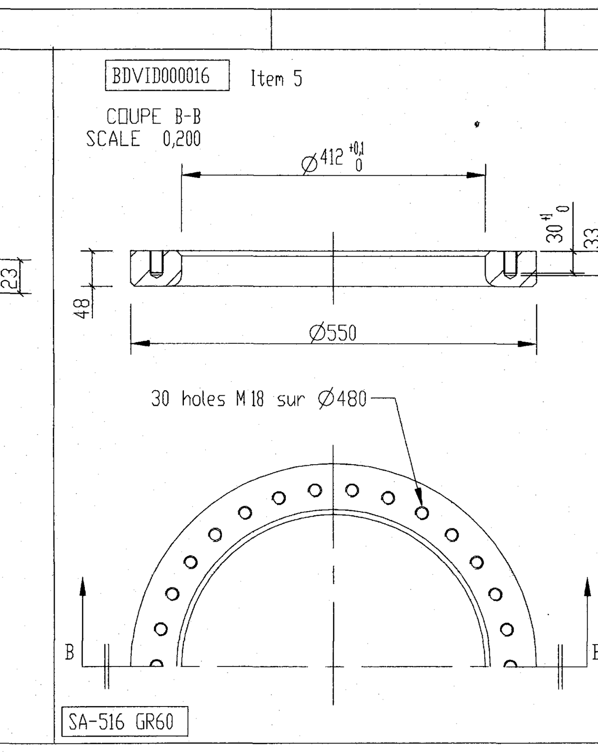

SA-516 GR60

BDPCD000241 Item 7
SCALE 0,200

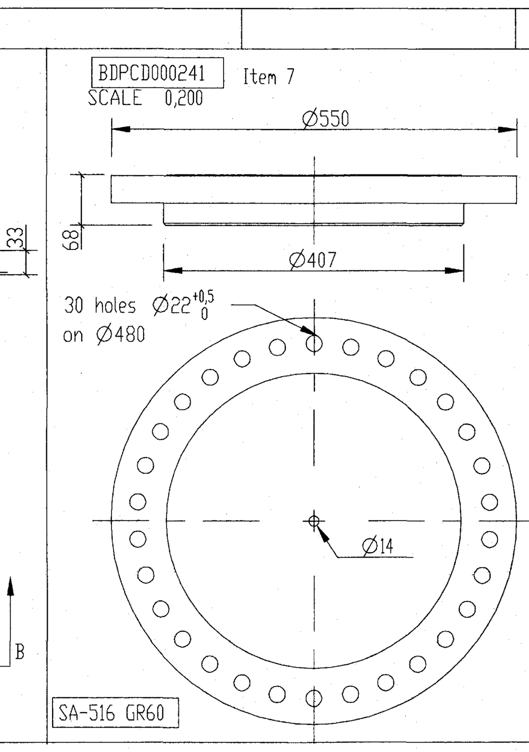

SA-516 GR60

DFQUB000001 Item 17-18

SCALE 0,500

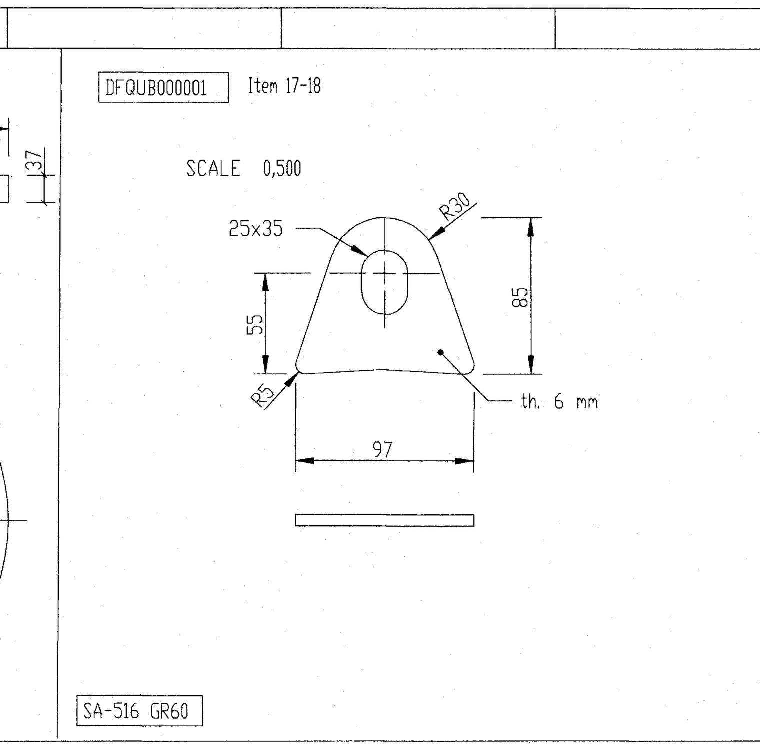

SA-516 GR60

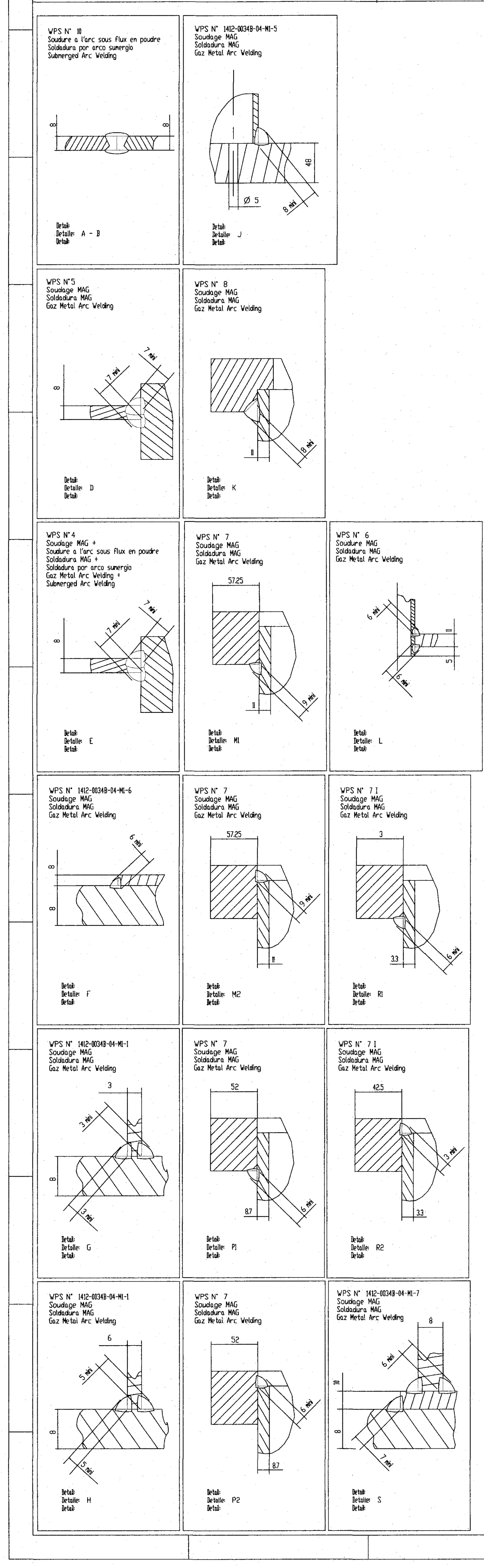

RH016M02000
Item#13 - Strainer
SCALE 0,500

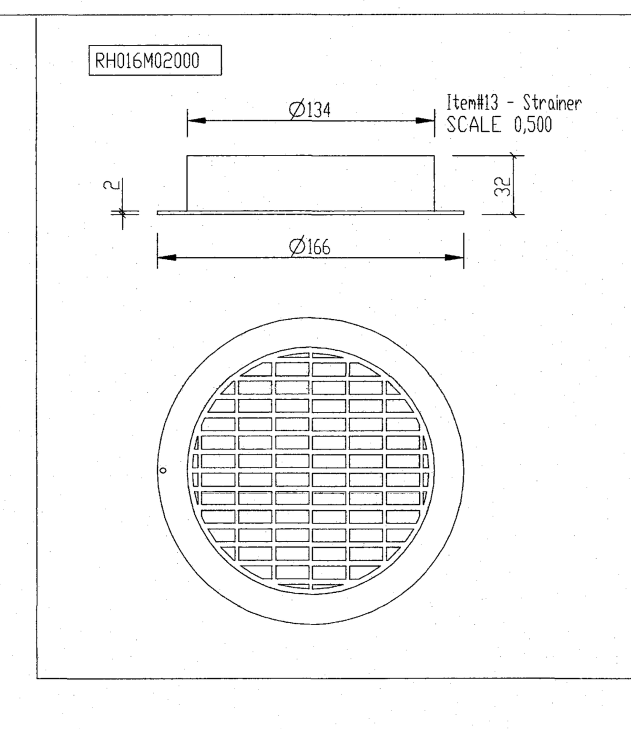

Calcul suivant AS1210-2010 2A Calculation conform to AS1210-2010 2A	
Hazard level (as4343-2005) : B	Pression de service : 16,00 bar Working pressure :
Coefficient : 0,85	Temperature de service : 0/ 70°C Working temperature :
Pression de calcul : 16,00 bar Design pressure :	Pression d'epreuve : 24,00 bar Test pressure :
Temperature de calcul : 70°C Design temperature :	Pression exterieure : 1.01 bar External pressure :

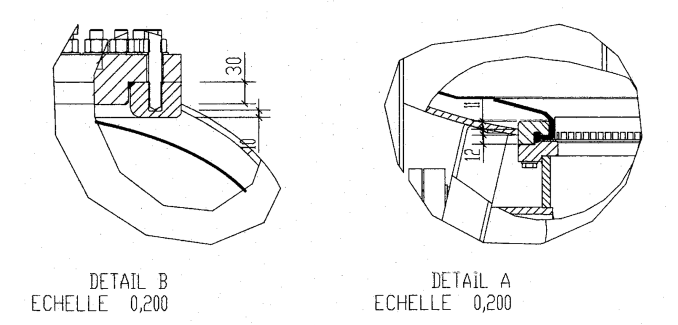

Table des epaisseurs / Thickness table

		Virole / Shell	Fond elliptique / Ellipsoidal head
Corrosion exterieure Outside corrosion	ce	0 mm	
Corrosion Inside corrosion	ci	1 mm	
Epaisseur resistante Resistant thickness	tr	5,83 mm	4.96 mm
Epaisseur nominale Nominal thickness	ts	8 mm	8 mm
Tolerance de fabrication Manufacturing tolerance	tol	0,5 mm	1,2 mm
Epaisseur finie Finished thickness	tf = ts-tol	7,5 mm	6,8 mm
Epaisseur minimale Minnimal thickness	t = tf-ce-ci	6,5 mm	5,8 mm
Diametre interieur Inside diameter	D	834 mm	834 mm
Epaisseur mini fabrication Mini thickness manufacture	tr + ci	6,83 mm	5,96 mm

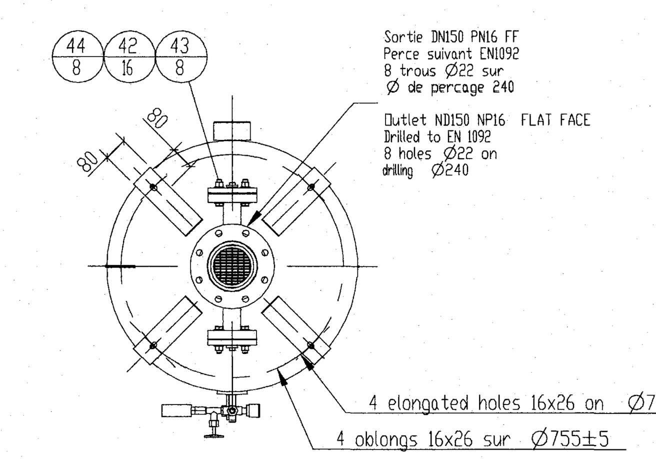

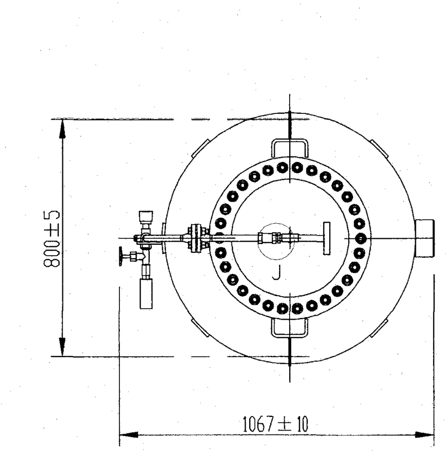

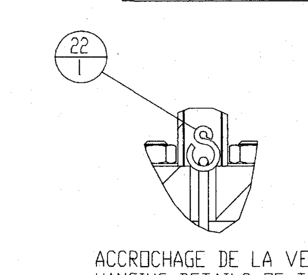

ACCROCHAGE DE LA VESSIE
HANGING DETAILS OF THE BLADDER
ECHELLE / SCALE 0,500

Coupon temoin
Production test plate
OT90MAU0008

DFRUI000062

MANUFACTURER	CHARLATTE RESERVOIRS 89400 MIGENNES FRANCE		
VESSEL MODEL	HYDROCHOC-AS1210-2010-CLASS 2A		
DESIGN CODE	AS1210-2A		
DESIGN CLASS		EXTERNAL PRESSURE (kPa)	101 kPa
SERIAL NUMBER		FUNCTIONAL LOCATION NUMBER (FL NUMBER)	
DESIGN REG.NUMBER		PLAN REG.NUMBER	
VOLUME (M3)	1000 L	DESIGN PRESSURE (kPa)	1600 kPa

DFRUI000063

HYDROTEST PRESSURE (kPa)	2400 kPa	HYDROTEST DATE	
WEIGHT EMPTY/FULL (Kg)	587/1587 kg	DESIGN TEMP (°C)	0-70 deg C
YEAR OF MANUFACTURE		MIN. SHELL/HEAD THICKNESS	9.5mm/6.8mm Min A/F
PRE-CHARGE PRESSURE	kPa	HAZARD LEVEL	AS4343-B
CORROSION ALLOWANCE	1 mm	HEAT TREATMENT	

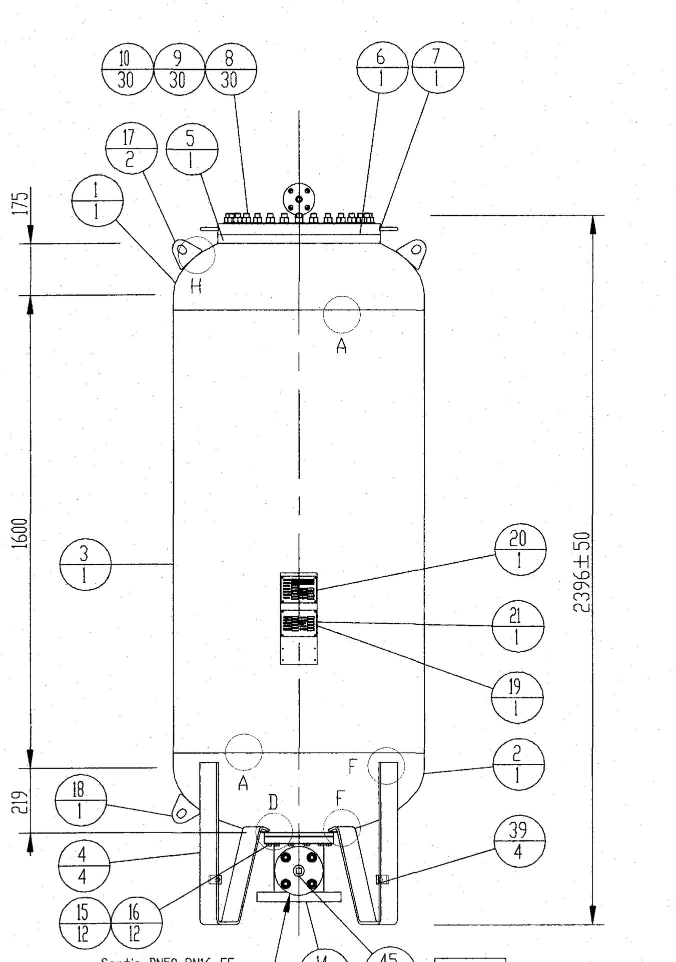

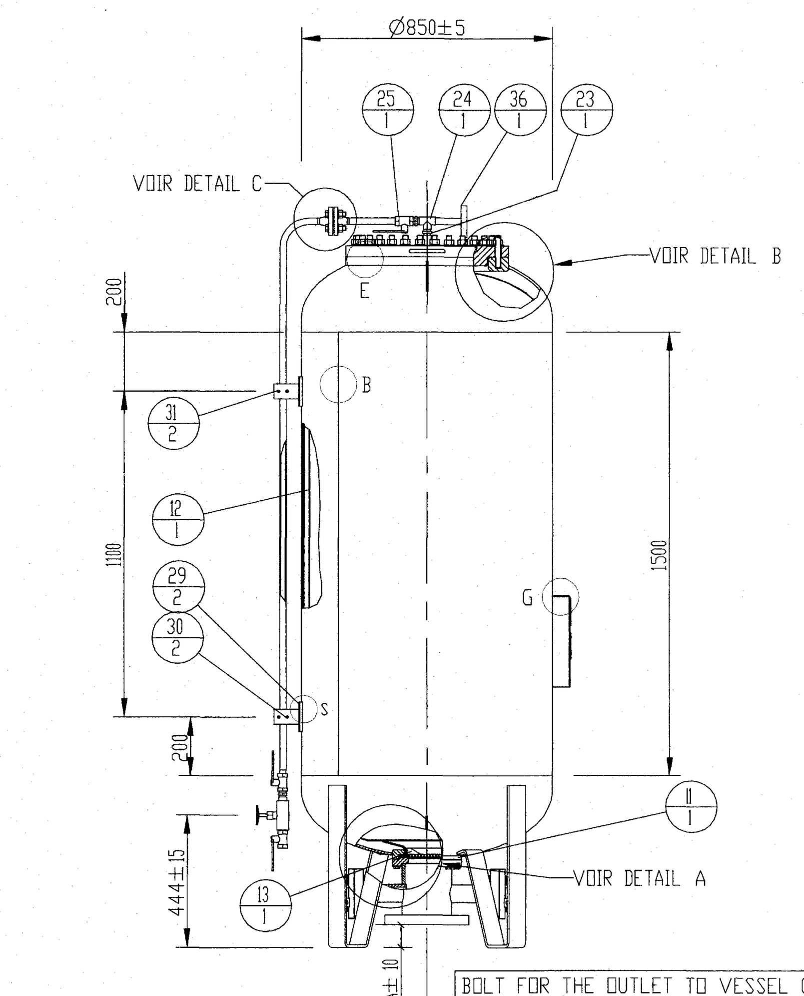

BOLT FOR THE OUTLET TO VESSEL CONNECTION

80 microns maximum sur toutes les portees de joint
80 microns maximum on all gaskets surfaces

Inside protection :
- Shot blasting SA 3
- 2 coat Interline 975SF, th. 500 microns Color AS2700 N14

Outside protection :
- Shot blasting S.A. 3
- 1 coat Inorganic zinc ethyl silicate, th. 80 microns
- 2 coat two pack catalysed acrylic coating, th. 200 microns
- 1 coat Laquer 60 microns
- Total th.540 microns

Ferrous material spec. for AUSTRALIAN STANDARD
in according with AS4458 page 91 Appendix B

Calcul to AS1210-2010 design compliance
Construction to AS1210-2010

RADIOGRAPHIE: 10% + NOEUDS

RADIOGRAPHY: 10% + NODES

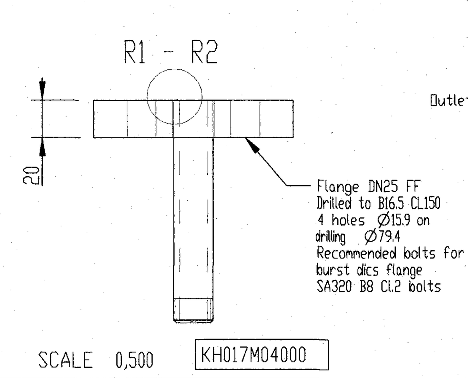

SCALE 0,500 KH017M04000

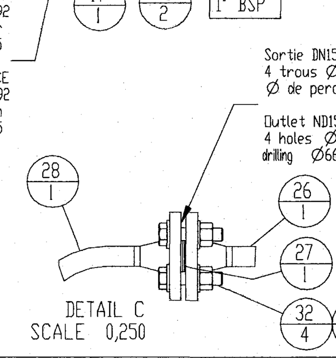

DETAIL C
SCALE 0,250

"Designed to" Full Vaccum
No cyclonic region

DN	Numero du reservoir Vessel number	Numero Number	Percage Drilling	A
150	KV003M00008	K7004M00001	8 holes Ø22 on Ø240	76

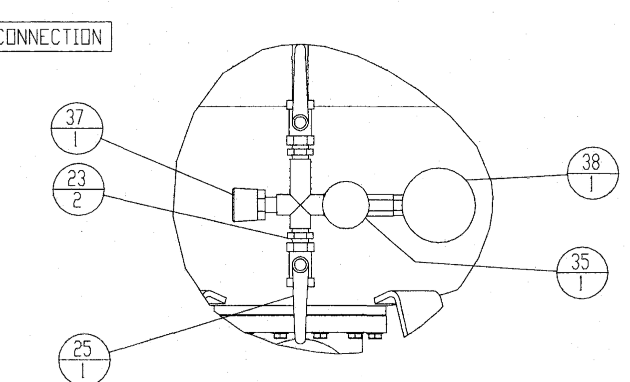

ECHELLE 0,200

Rep. Item	Qte Qty	Numero Number	Designation Description	Matiere Material	Observations Remarks
45	2	GBOUB000007	BOUCHON M 1" GAZ / PLUG 1" BSP M	SA-105	
44	8	VEOHI160006S	ECROU H M16 A4 INOX / NUT H M16	SA-194 8M	
43	8	VVHMI160806	VIS H M16X80 A4 INOX / SCREW H M16X80	SA-320 B8M Cl.1	
42	16	VRMXI160006	RONDELLE M16 A4 INOX / WASHER M16	STAINLESS STEEL	
41	2	BDPCD000213	TAMPON DN50PN16 ISO / BLIND FLANGE ND50NP16 ISO	SA-516 GR60	
40	2	JPAXW005040	JOINT PLAT DN50 PN40 ISO / GASKET ND50 NP40	TESNIT BA-U	
39	4	DPRUI000165	PATTE DE TERRE d14 / EARTH LUG	1.4404	
38	1	GMAXI000001	MANO 0A25B D100 1/2"INOX / PRESSURE GAUGE 0-25B	STAINLESS STEEL	
37	1	RH001M05001	ENSEMBLE DE GONFLAGE / INFLATING SYSTEM	SUB-ASS	
36	1	KH017M04000	BRAS 1/2"GAZ DN25 PERCE SUIVANT B16.5 / ARM DN25 DRILLED TO B16.5	316L	
35	1	GROXI000007	ROBINET A POINTEAU 1/2" GAZ MF / PRESSURE GAUGE VALVE 1/2" BSP	STAINLES STEEL	
34	4	VEOHI140006	ECROU H M14 A4 INOX / NUT H M14	SA-194 8M	
33	8	VRMXI140006	RONDELLE M14 A4 INOX / WASHER M14	STAINLESS STEEL	
32	4	VVHMI140606	VIS H M14X60 A4 INOX / SCREW H M14X60	SA-320 B8M Cl.1	
31	2	IETXI000006	ETRIER 1/2" D8 / SUPPORT D8	STAINLESS STEEL	
30	2	DPRUB000763	PLAT SUPPORT NIVEAU / SUPPORT PLATE	S235JR	
29	2	DFRRS001145	FOURRURE 100X100X10 / PLATE 100X100X10	SA-516 GR70	
28	1	KU006M03001	TUBE DE GONFLAGE EQUIPE / PIPE 1/2 NPT CL300 (PN50) SCH80	316L	STAINLESS STEEL
27	1	JPAXW001550	JOINT PLAT DN15 CL300 (PN50) / GASKET ND15 CL300	TESNIT BA-U	WITHOUT ABESTOS
26	1	KU006M02001	BRAS DN15 CL300 (PN50) 1/2GAZ INOX / ARM DN15 CL300 (PN50) SCH80	316L	STAINLESS STEEL
25	2	GROXI000001	ROBIN.BOIS 1/2" FF / PLUG VALVE 1/2" BSP FF	STAINLESS STEEL	
24	1	GTEXI000002	TE FFF 1/2" / TEE BSP FFF	STAINLESS STEEL	
23	3	GMAMI000003	MAMELON DB MM 1/2 MMMT100 / NIPPLE 1/2" MMMT100	316L	
22	1	DPYRI000001	ESSE D'ACCROCHAGE / CATCHING ESSE	STAINLESS STEEL	
21	1	DFRUI000063	PLAQUE N.2 / MANUFACTURER PLATE	SA-240 316L	
20	1	DFRUI000062	PLAQUE N.1 / MANUFACTURER PLATE	SA-240 316L	
19	1	DFRPD000004	GRAND PONTET / SUPPORT PLATE	SA-516 GR60	
18	1	DFQUB000001	PATTE D'ELINGAGE EP6 / LIFTING LUG	SA-516 GR60	
17	2	DFQUB000001	PATTE D'ELINGAGE EP6 / LIFTING LUG	SA-516 GR60	
16	12	VVHMI100406	VIS H M10X40 A4 INOX / SCREW H M10X40	SA-320 B8M Cl.1	
15	12	VRMXI100006	RONDELLE M10 A4 INOX / WASHER M10	STAINLESS STEEL	
14	1	K7004M00001	SORTI.DN150/50/50 PN16 EN1092 / OUTLET ND150/50/50 NP16 EN1092	SUB-ASS	
13	1	RH016M02000	CREPINE CAILL. INTER / STRAINER	SUB-ASS	
12	1	RV040M04000	VESSIE 1000L D850V COL/FOND / BLADDER 1000L D850V	BUTYL	
11	1	BDSOD000012	BRIDE DE SORTIE / OUTLET FLANGE	SA-516 GR60	
10	30	VEOHI180006S	ECROU H M18 A4 INOX / NUT H M18	SA-194 8M	
9	30	VRMXI180006	RONDELLE M18 A4 INOX / WASHER M18	STAINLESS STEEL	
8	30	VGOUI181106	GOUJON M18-80 bm30 / STUD BOLT M18	SA-320 B8M CL2	
7	1	SV101M14000	COUVERCLE D550 TR14 ASS / BLIND FLANGE D550 TH68	SUB-ASS	BDPCD000241
6	1	JTOXM000002	JOINT TORIQUE DI406,5X6,99 / O RING id 406,5X6,99	NITRILE	
5	1	BDVID000016	BRIDE DE550 DI410 EP48 / FLANGE ED550 ID410 TH48	SA-516 GR60	
4	4	DPRPB000175	PIED 80X8 D850 V 300/SOL / LEG 80X8	SA-283 Gr.c	
3	1	DFRRS000331	VIROL.D850 EP8 L1500 / SHELL D850 TH8 L1500	SA-516 GR70	
2	1	FELXS000131	FOND ELLIPTIQUE D850 / ELLIPSOIDAL CAP OD850	SA-516 GR70	
1	1	FELXS000131	FOND ELLIPTIQUE D850 / ELLIPSOIDAL CAP OD850	SA-516 GR70	

Ratio 1.9/1

Rev.	Date	Modifications	Dess.	Verif.
4	14-Apr-14	Quantity item33 become 8	[signature]	[signature]
3	01-Apr-14	Add washers on ND50 nozzles Change welding detail K	[signature]	[signature]
2	07-Mar-14	cover's modification, modification as per costumer's request	[signature]	[signature]
1	05-Mar-14	Modification as per costumers' request	FD	PF
00	04-Apr-13	Edition initiale - First issue	PF	FD

ACCUMULATEUR A VESSIE / SURGE VESSEL 1000 LITRES
PS / Working pressure : 16,00 bar - PE / Test pressure : 24,00 bar

CHARLATTE RESERVOIRS FAYAT GROUP

17, RUE PAUL BERT 89400 MIGENNES (FRANCE)
TEL. : 03.86.92.38.00
TELECOPIEUR : 03.86.92.30.01

ECHELLE - SCALE : 0,080 | DATE - DATE : 04-Apr-13 | TOL. GENE. - GENE. TOL. : ±5 | POIDS - WEIGHT : 587 kg | MATIERE - MATERIAL : S/ENS | TRAITEMENT - TREATMENT : / | A0

N° KV003M00008
REV. 4

THIS DOCUMENT IS THE PROPERTY OF CHARLATTE S.A. AND CANNOT BE REPRODUCED OR COMMUNICATED WITHOUT PRIOR AGREEMENT OF CHARLATTE RESERVOIRS S.A.S.

ISSUE	DATE	GRID	REVISION	DRN	REC	APPD

566
810

DESIGN SURVEY	VERTICAL DATUM	DES CALC
NONE	NONE	M.BRUNI
	COORDINATE SYS NONE	DES CHD M.BRUNI
ASCON SURVEY NONE	DES REF	DRN J.SAUNDERS
		Q.C. CHD P.MIRCO

NORTH POINT

INFRASTRUCTURE DESIGN BRANCH

RECOMMENDED
M.Bruni 3/11/2015
SENIOR MECHANICAL ENGINEER
APPROVED
[signature] 3.11.15
PRINCIPAL MECHANICAL ENGINEER

WATER CORPORATION

MECHANICAL STANDARD DRAWING
MECHANICAL DESIGN STANDARD
PRESSURE VESSEL - BLADDER - PN16 - 1m3 - DN150
MMR 21588 - DESIGN REGISTRATION PV6-188083/15

FILE JT1 2013 08946 V01 | PLAN JZ39-91-23 | CAD | ISSUE A
PROJECT

ORIGINAL SHEET SIZE A1
MF 06 NOV 2015

© THIS DRAWING IS THE PROPERTY OF THE WATER CORPORATION. IT SHALL NOT BE COPIED WITHOUT PERMISSION.

CAD MANAGEMENT_NOT READ ONLY\EMS\STANDARD DRAWINGS\SURGE VESSEL\JZ39-91-23 15:31 03/11/2015 saundej0/WS17671