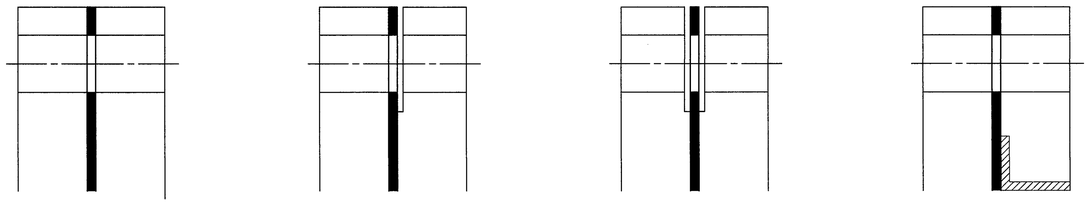

ISOLATION JOINT TYPES

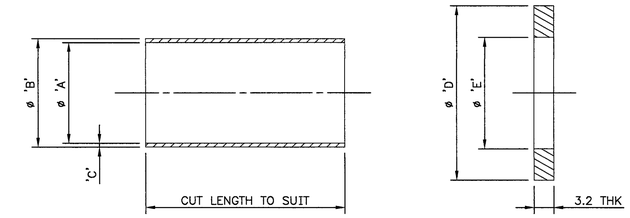

INSULATING SLEEVE

BOLT SIZE	'A' MIN. I.D. (mm)	'B' MAX. I.D. (mm)	'C' MIN. WALL THICKNESS (mm)
M16	16.48	17.53	0.38
M20	20.48	21.51	0.38
M24	24.48	25.53	0.38
M27	27.48	29.51	0.76
M30	30.48	32.51	0.76
M33	33.48	35.51	0.76
M36	36.48	38.52	0.76
M39	39.48	41.50	0.76
M45	45.48	47.52	0.76
M52	52.48	54.51	0.76
M56	56.48	61.52	0.76

INSULATING WASHER

BOLT SIZE	'D' O.D. (mm)	'E' APPROX. I.D. (mm)
M16	34.93	18.64
M20	44.45	24.99
M24	50.80	27.79
M27	55.55	31.75
M30	61.90	34.93
M33	66.68	37.31
M36	73.03	41.28
M39	73.03	41.28
M45	88.90	50.01
M52	95.25	55.55
M56	107.95	60.33

GENERAL NOTES

1. FLANGE INSULATING KIT AS MANUFACTURED BY SAVCOR (OR EQUIVALENT)
2. SITE MEASURE FLANGE THICKNESSES PRIOR TO ORDERING KIT.
3. GASKET O.D. TO EQUAL FLANGE O.D.
4. MATERIALS–
   INSULATING SLEEVE: MYLAR–CLEAR TRANSLUCENT–POLYESTER RESIN INSULATING WASHER: G10
5. GASKET TO BE 3mm FULL FACE COMPRESSED FIBRE KLINGER C–4430 OR APPROVED EQUIVALENT.
6. GASKET TO BE 3mm FULL FACE ELASTOMERIC NOVUS RED SILICON (60 DURO) OR APPROVED EQUIVALENT.
7. GASKET MATERIAL TO HAVE DIELECTRIC STRENGTH OF AT LEAST 15.2kV/mm.
8. WRAPPING TO BE USED ON BURIED FLANGES ONLY AS PER WATER CORPORATION TECHNICAL SPECIFICATION: L1 (SYSTEM B).
9. REFERENCE DRAWINGS:
   EG20–4–2: BURIED MAGFLOW METER INSTALLATION STEEL PIPELINES.
10. FLANGE ASSEMBLY AND BOLT TORQUING SHALL BE IN ACCORDANCE WITH WATER CORPORATION STANDARD DS 38–02.
11. THIS STANDARD IS FOR USE WITH GALVANIZED BOLTS AND WASHERS ONLY IN ACCORDANCE WITH DS38–02. SELECTED BOLTS AND WASHERS MUST NOT INTERFERE WITH INSULATING INTEGRITY OF THE JOINT. ENSURE SMOOTH FINISH TO WASHER FACES.
12. IN THE CASE OF VALVE FLANGE IRREGULARITIES THE USE OF A SECOND STEEL WASHER INSTEAD OF SPOTFACING IS ACCEPTABLE.
13. FLANGED ISOLATION JOINTS USED FOR CATHODIC PROTECTION SHALL BE PROVIDED WITH INSULATED FLANGE TEST POINTS IN ACCORDANCE WITH LL33–054–004.

NOTE: APPLY EACH OF THE FOLLOWING ON SITE WHEN CONDITIONS ARE DRY:
- PETROLATUM PRIMER THEN,
- PETROLATUM PROFILING MASTIC THEN,
- PETROLATUM TAPE AND THEN,
- PVC OVER–WRAP TAPE

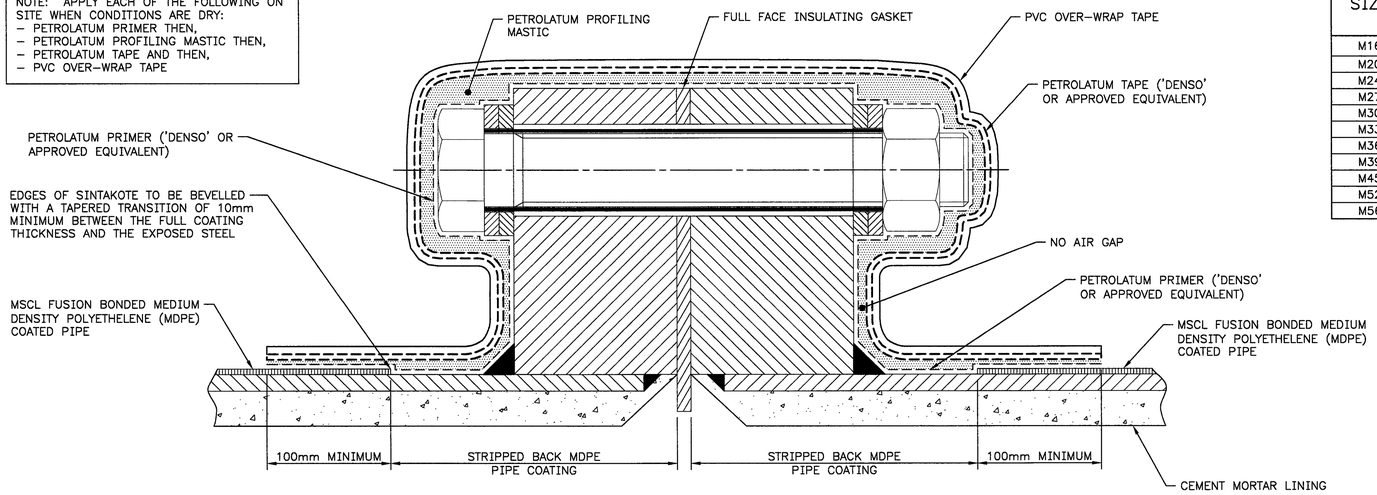

BURIED PIPE JOINTS ONLY – WRAPPING ARRANGEMENT

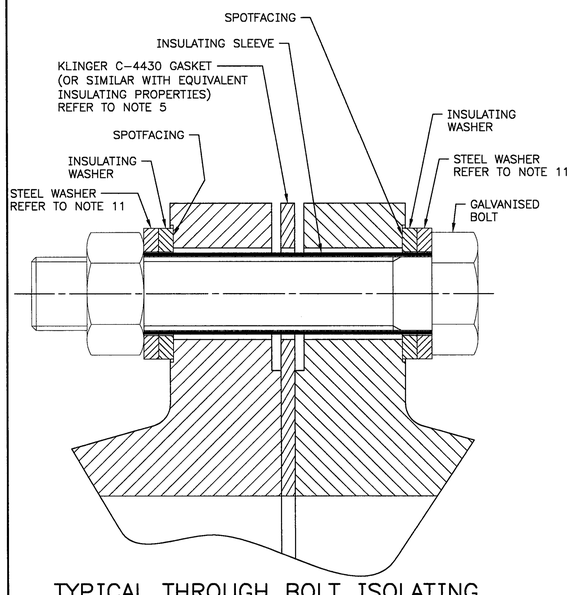

TYPICAL THROUGH BOLT ISOLATING JOINT ARRANGEMENT

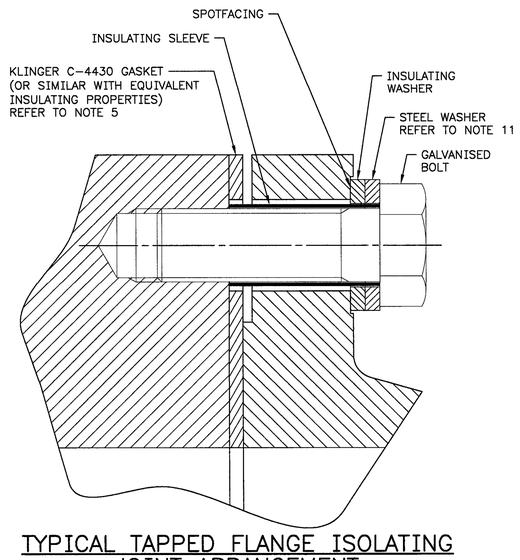

TYPICAL TAPPED FLANGE ISOLATING JOINT ARRANGEMENT

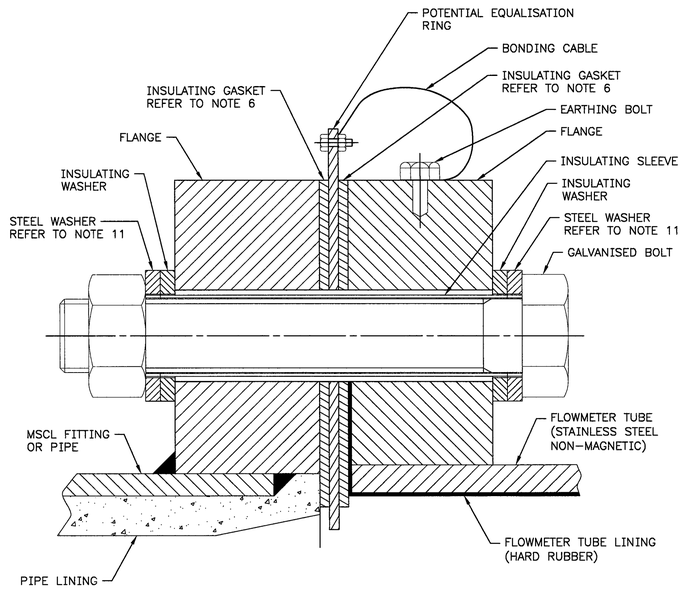

FLOWMETER ISOLATION JOINTS ONLY – EBONITE (HARD RUBBER) LINER

2 INSULATING GASKETS

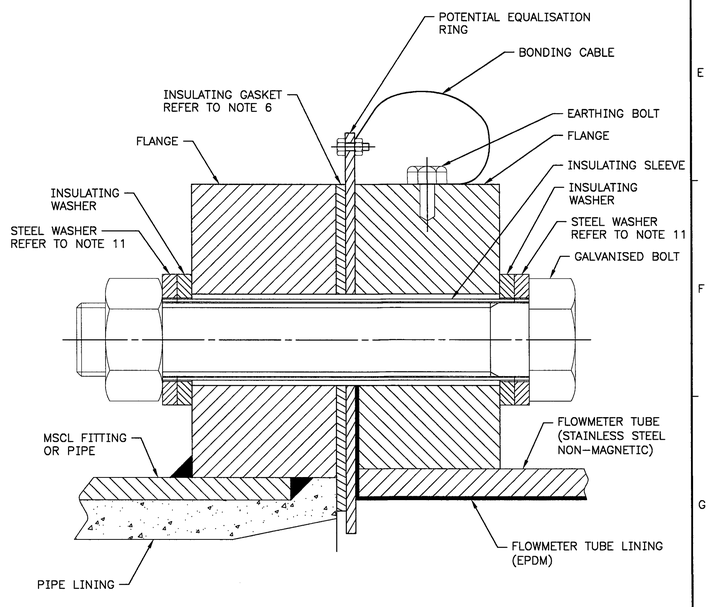

FLOWMETER ISOLATION JOINTS ONLY – EPDM LINER

1 INSULATING GASKET

ISSUE	DATE	GRID	REVISION	DRN	REC	APPD
D	01/2018		SHEET TITLE & GENERAL NOTES REVISED ALSO FLOWMETER IJ WITH EPDM LINED PIPE & EBONITE IDENTIFIED FOR FLOWMETER IJ & SOME GENERAL NOTES ADDED	FR	GRD	DOQ
C	02/2014		WRAPPING SYSTEM AMENDED	SL	MB	SE
B	03/2010		REDRAWN IN AUTOCAD	AC	GC	MC

DESIGN SURVEY NONE | VERTICAL DATUM NONE | COORDINATE SYS NONE | ASCON SURVEY NONE | DES REF | DES CALC D. HEATON | DES CHD M. CALLARD | DRN L. ZUIDEMA | Q.C. CHD M. KEATING | NORTH POINT

ENGINEERING

RECOMMENDED 01/12/2009 M.L.HOLMES ENGINEERING CONSULTANT
APPROVED 01/12/2009 S.W.EVANS PROJECT MECHANICAL ENGINEER

WATER CORPORATION

MECHANICAL STANDARD DRAWING
MECHANICAL DESIGN STANDARD
DS38–02 – FLANGE ISOLATION JOINTS

FILE | PROJECT | PLAN JZ39–91–10 | CAD | ISSUE D | ORIGINAL SHEET SIZE A1 | MF 24 JAN 2018

566
810

© THIS DRAWING IS THE PROPERTY OF THE WATER CORPORATION. IT SHALL NOT BE COPIED WITHOUT PERMISSION.

CAD MANAGEMENT_NOT READ ONLY\EMS\STANDARD DRAWINGS\JZ39\JZ39–091–010–01D 11:42 24/01/2018 raccuif0/WS27102